Harwich Planning Board Agenda
**Tuesday, February 09, 2021 – 6:30 PM**
Town Hall, 732 Main Street, Harwich
This meeting will be held **VIA REMOTE PARTICIPATION ONLY**.
Access is available through GoToMeeting.com and live broadcast on Channel 18*

**Please join my meeting from your computer, tablet or smartphone.**
786https://global.gotomeeting.com/join/678750285

**You can also dial in using your phone.**
United States: +1 (872) 535-3211

**Access Code:** 678-750-285

**I. CALL TO ORDER** Pursuant to Governor Baker's March 12, 2020 Order Suspending Certain Provisions of the Open Meeting Law, G.L. c. 30A, §20, and the Governor's March 15, 2020 Order imposing strict limitations on the number of people that may gather in one place, this meeting of the Harwich Planning Board is being conducted via remote participation. No in-person attendance of members of the public will be permitted, but every effort will be made to ensure that the public can adequately access the proceedings as provided for in the Order.

**II. JOINT PUBLIC HEARING – PURSUANT TO M.G.L. C. 83, § 10 AND CHAPTER 295 OF THE CODE OF THE TOWN OF HARWICH, THE TOWN ENGINEER, ACTING AS THE TOWN OF HARWICH STORMWATER AUTHORITY, WILL HOLD A JOINT PUBLIC HEARING WITH THE PLANNING BOARD:**

**A. Wychmere Harbor Real Estate LLC, applicant & owner**, c/o David J. Michniewicz of Coastal Engineering Company, Inc., representative, seeks a Local Stormwater Permit to demolish existing restaurant/building, swimming pools, and patios and replace with a new restaurant building, swimming pools, and patios. The existing "Coastal Bar" building will be turned 90 degrees and moved back from the beach. The proposed project will decrease site coverage in the project area by 1,724+/- square feet. The proposed area of land disturbance is approximately 83,900 +/- square feet. The application is pursuant to the Town of Harwich Comprehensive Stormwater and Illicit Discharge Requirements. The property is located at 23 Snow Inn Road, Map 8, Parcel P2, in the RH 3 and R L zoning districts. **PB2020-32 Wychmere Harbor Real Estate LLC,** applicant & owner, c/o Attorney Andrew Signer, representative, seeks to amend the Site Plan Review Special Permits granted in Cases PB2019-27 and PB2020-23, or in the alternative a new Special Permit to make additional alterations to the previously approved design of the Beach Club to re-design the pool area to include an additional pool, construct a new infant pool, create a fenced, natural lawn service alley along the east side, and make accompanying landscape and walkway revisions. The application is pursuant to the Code of the Town of Harwich §325-55 (Site Plan Review), and Chapter 400. The property is located 23 Snow Inn Road, Map 8, Parcel P2-12, in the RH 3 and R L zoning districts. *The Planning Board Hearing was continued from 1/12/2021 to allow for this joint hearing with the Town Engineer.*

**III. Public Hearings**

**A.** *Continuance*: **PB2020-34 Cool Change LLC, Allen Harbor Marine,** applicant & owner, c/o Rob O'Neill, representative, seeks a Site Plan Review and Use Special Permit pursuant to §§325-55; 325-13, Use Table, paragraph IV.19; and 325-51to construct a 4,102 square foot commercial building for a marine use (boat maintenance and repair) and associated parking at property located at 282 Route 28, Map 12, Parcel G2-1 in the CH-1 zoning district. *Hearing Continued from January 26, 2021.*

**B.** *Continuance*: **PB2020-26 The Royal Apartments LLC, as owner**, Benjamin E. Zehnder, Esq, Representative, seeks approval of Special Permits for Multifamily Use and Site Plan Review for the proposed use and additional parking and other appurtenances pursuant to the Code of the Town of Harwich §§325-51.Q (approved at the 9-26-2020 Town Meeting) and 325-55. The property is located at 328 Bank Street, Map 41, Parcel N4 in the M-R-L zoning district. *Hearing continued from January 12, 2021.*

## IV. PUBLIC MEETING**

A. New Business:
   1. **Minutes:** January 12, 2021 and January 26, 2021
   2. **Zoning Amendment Discussions and Possible Votes:**
      A. West Harwich Special District
      B. Parking in the MRL and MRL-1 Zoning Districts

B. Old Business:

C. Briefings and Reports by Board Members

## V. ADJOURN

***PLEASE NOTE:** *We request all who are attending this meeting to please observe the same courtesies that would be observed if you were here in person. If you need to conduct unrelated business before your item on the agenda comes up, we request you mute your line –* ***Use *6 to mute and unmute your phone****.*

******Per the Attorney General's Office – Boards/Commissions may hold an open session for topics not reasonably anticipated by the Chair 48 hours in advance of the meeting following "New Business".

***Next Planning Board Meeting (****Subject to Change****) –*** *Tuesday, February 23, 2021.*
*Requests for accommodations for any person having a disability can be made by contacting the Administration Office at 508-430-7513.*

Authorized Posting Officer: Elaine Banta, ebanta@town.harwich.ma.us or 508-430-7511

# TOWN ENGINEER & INTERIM TOWN PLANNER

732 Main Street, Harwich, MA 02645

## AGENDA ITEM # II.A

To: Planning Board
From: Griffin Ryder Town Engineer
Charleen Greenhalgh, Interim Town Planner
Date: February 1, 2021
Re: Staff Report – For Joint Public Hearing
Local Stormwater Permit and Site Plan Review Special Permit

Pursuant to M.G.L. c. 83, § 10 and Chapter 295 of the Code of the Town of Harwich, the Town Engineer, acting as the Town of Harwich Stormwater Authority, will hold a Joint Public Hearing with the Planning Board for the following:

**Wychmere Harbor Real Estate LLC, applicant & owner**, c/o David J. Michniewicz of Coastal Engineering Company, Inc., representative, seeks a Local Stormwater Permit to demolish existing restaurant/building, swimming pools, and patios and replace with a new restaurant building, swimming pools, and patios. The existing "Coastal Bar" building will be turned 90 degrees and moved back from the beach. The proposed project will decrease site coverage in the project area by 1,724+/- square feet. The proposed area of land disturbance is approximately 83,900 +/- square feet. The application is pursuant to the Town of Harwich Comprehensive Stormwater and Illicit Discharge Requirements. The property is located at 23 Snow Inn Road, Map 8, Parcel P2, in the RH 3 and R L zoning districts. **PB2020-32 Wychmere Harbor Real Estate LLC,** applicant & owner, c/o Attorney Andrew Signer, representative, seeks to amend the Site Plan Review Special Permits granted in Cases PB2019-27 and PB2020-23, or in the alternative a new Special Permit to make additional alterations to the previously approved design of the Beach Club to re-design the pool area to include an additional pool, construct a new infant pool, create a fenced, natural lawn service alley along the east side, and make accompanying landscape and walkway revisions. The application is pursuant to the Code of the Town of Harwich §325-55 (Site Plan Review), and Chapter 400. The property is located 23 Snow Inn Road, Map 8, Parcel P2-12, in the RH 3 and R L zoning districts.

A joint public hearing on this matter is scheduled for a virtual meeting to be held on Tuesday, February 9, 2021 not earlier than 6:30pm. The public hearing for Site Plan Review was opened on January 12, 2021 and abutters were notified via certified mail on December 29, 2020. The Stormwater Permit public hearing will be opened on February 9, 2021 and the abutters were notified on January 20, 2021.

The Stormwater and Illicit Discharge Regulations (the "Regulations") were adopted by the Town of Harwich Board of Selectmen acting in their capacity as the Sewer Governance Board, which shall hereafter also act as the Town of Harwich Stormwater Authority. These regulations are enacted pursuant to G.L. c. 83, §10 and Chapter 295 of the Code of the Town of Harwich. The Selectmen further authorized the Town Engineer to serve as the Stormwater Authority.

Many future developments required to appear before the Planning Board will likely trigger the need for a Stormwater Permit. In an effort to streamline the permitting process a joint hearing will be held wherever possible. This approach will likely become the norm for the future.

**The Public Hearing Process:**

The public hearings will be opened by the Town Engineer and the Planning Board Chair respectively. The Town Engineer will hold his portion of the hearing and act accordingly. Following the conclusion of the Stormwater permit hearing, the Planning Board will proceed with the continued Site Plan Review public hearing.

**Description**

The applicant received two prior Site Plan Reviews and Use Special Permits (PB2019-27 and PB2020-23) for site improvements at the site. The application for the Site Plan amendment is simply to reconfigure the pool area. The application was filed with the Town Clerk on December 1, 2020 and include the following:

1. Form A – Special Permits & Site Plan Review.
2. A project narrative, date stamped received Dec. 1, 2020.
3. Fee of $525.00.
4. Site Plan prepared by Coastal Engineering Co., for Wychmere Harbor Real Estate, LLC., entitled "Proposed Building and Site Improvements at Wychmere Beach Club", dated 6-12-19, latest revision date 11/20/2020, prepared and stamped by David J. Michniewicz, P.E., and scale as noted, Sheet C2.2.1;
5. Landscape Submission Set prepared by Hawk Design, Inc., for Wychmere Beach Club, dated (or latest revision date) 11/30/20, as follows:
    1. L1.0 Overall Site Plan, scale 1" = 20';
    2. L1.1 Materials Enlargement Plan, scale 1" = 10';
    3. L1.2 Materials Enlargement Plan, scale 1" = 10';
    4. L2.0 Planting Site Plan, scale 1" = 20';
    5. L2.1 Planting Details, scale 1" = 10';
    6. L2.2 Planting Enlargement Plan, scale 1" – 10';
    7. L3.0 Overall Site Lighting Site Plan, scale 1" = 20';
    8. L3.1 Lighting Enlargement Plan, scale 1" = 10';
    9. L3.2 Lighting Enlargement Plan, scale 1" = 10';
    10. L4.0 Overall Grading Site Plan, scale 1" = 10';
    11. L4.1 Grading Enlargement Plan, scale 1" = 10';
    12. L4.2 Grading Enlargement Plan, scale 1" = 10';
    13. D1.0 Construction Details, scale as noted;
    14. D1.1 Construction Details, scale as noted;
    15. D2.0 Site Lighting Specifications.

Attorney Singer's narrative defines the scope of the proposed amendments as being "to make additional alterations to the previously-approved design of the redeveloped Beach Club at the southern end of the Property – redesignate the approved "infant pool" to "young adult pool", and add an infant pool, create a fenced, natural-lawn service alley along the east side, and make accompanying landscape and walkway revisions. There will be no change to the previously-approved buildings or use."

**MGL Reference and Stormwater Authority Jurisdiction**

Pursuant to the Comprehensive Stormwater and Illicit Discharge Regulation established pursuant to M.G.L. c. 83, § 10 and Chapter 295 of the Code of the Town of Harwich, Section 5, Applicability:

A. These Regulations shall apply to land disturbances that drain to the municipal storm drain system or, directly or indirectly, into a watercourse or water of the Commonwealth. Except as authorized by the Stormwater Authority in a Local Stormwater Permit, no person shall perform any activity that results in a land disturbance above the threshold contained in this subsection, below.
B. The following uses and activities shall be regulated under this by-law:
    1. Subdivisions and construction activities of any kind disturbing an area equal to or greater than one (1) acre (43,560 square feet); and
    2. Development or redevelopment involving multiple separate activities in discontinuous locations or on different schedules if the activities are part of a larger common plan of development or safe that would disturb area equal to or greater than one (1) acre (43,560 square feet).

**MGL Reference and Planning Board Jurisdiction**

Pursuant to MGL c.40 A, §9 the Planning Board must, within 65 days of submission of application for a special permit hold a public hearing. The decision of the Planning Board shall take place within 90 days following the close of the public hearing. Further, a special permit issued shall require a two-thirds vote of the Board.

The Planning Board has jurisdiction to review this application pursuant to the Code of Town of Harwich §325-55 for Site Plan Review Special Permit for the amendment to the original site plans for the pool and lawn area. Further, pursuant to §325-55.E.(1) "*If the site plan meets the requirements of this By-law and the Planning Board Rules and Regulations Governing Subdivision of Land and Site Plan Review, as amended, the Planning Board shall approve it"*. However, the Board cannot deny approval of a site plan for a use which is allowed by right (not by special permit) in the district, but may impose reasonable conditions on the proposed use. Please refer to §325-55.E. for specific allowable conditions.

**Waivers** At this time no waivers have been requested.

**Comments from other Boards, Departments, Committees**

**Health:** Must have a Board of Health Pool Application Permit and passing inspection prior to use; Owners/Contractors are responsible for ensuring that all requirements under 105 CMR 435.00 are met; Food service permits are required prior to opening, and; Applicant must submit kitchen design plans to health Department prior to construction.

**Fire & Highway:** No issues or concerns.

**Water:** 8" Water main to be moved two feet away from all structures; Field lock gaskets be used at all joints and fixtures; Approved inspector be on site for moving or reinstalling all water main/services/fire services, and; Pressure test of new main being installed to Water Department guide lines.

**Engineering:** The Town Engineer reviewed the plans with the Town Planner; comments are noted below.

**Planning Staff Comments**

1. The Town Engineer and Interim Town Planner reviewed the plans on December 15, 2020. All items raised at that time have been addressed; however, we will be needing a revised site plans showing the correct lot coverage.
2. One letter from an abutter was received and is attached.
3. The applicant received Zoning Board of Appeals relief on January 27, 2021 to amend their Special Permits.
4. Standard conditions are recommended.

**BOARD VOTE**

**Continuance**

If the Board will require additional information or wants to take the matter under advisement the following motion is recommended:

Move to continue the hearing for **PB2020-32 Wychmere Harbor LLC,** to no earlier than 6:30 pm on _____ (*Feb. 23, March 9, March 23)* for the following reason(s): *Need to provide reasons for the continuance…additional information.*

**IF BOARD IS READY TO RENDER A DECISION, THE FOLLOWING MOTIONS ARE PROVIDED:**

**I. Vote to close the public hearing.**

**II. Vote to Adopt Proposed Findings:**

To adopt the following finding of fact:

1. The property is located within the RH-3 and R-L zoning districts.
2. The proposed changes of use and alterations to the site were approved by the Zoning Board of Appeals pursuant to Board of Appeals Case #2019-28, #2020-32 and #2020-45.
3. The Conservation Commission approved the changes within conservation jurisdiction pursuant to MA DEP SE32-2383 and SE32-2387.
4. The use as developed will not adversely affect the neighborhood.
5. The specific site is an appropriate location for such a use, structure or condition.
6. There will be no nuisance or serious hazard to vehicles or pedestrians.
7. Adequate and appropriate facilities will be provided for the proper operation of the proposed use.

**III. Vote on Site Plan Review Special Permit: (*Please Note*:** An affirmative vote by at least five Planning Board members is required.)

1. To **approve with conditions** case number **PB2020-32 Wychmere Harbor Real Estate LLC, for an** amended Site Plan Review Special Permits pursuant to the Code of the Town of Harwich §325-55 (Site Plan Review), and Chapter 400, which was previously granted in Cases PB2019-27 and PB2020-23, to make additional alterations to the previously approved design of the Beach Club to re-design the pool area to include an additional pool, construct a new infant pool, create a fenced, natural lawn service alley along the east side, and make accompanying landscape and walkway revisions for property located at 23 Snow Inn Road, Map 8, Parcel P2-12, in the RH 3 and R-L zoning districts. The decision is based on the aforementioned findings of fact and the fact that the

application meets the necessary requirements and criteria for approval pursuant to the Code of Town of Harwich and following conditions:

A. All Zoning Board of Appeals, Board of Health and Conservation Commission requirements shall be met.
B. The conditions imposed pursuant to Planning Board cases PB2019-27 and PB2020-23 shall be adhered to.
C. All signage shall comply with the Sign Code and Building Department Requirements.
D. All lighting shall comply with the Lighting Code Requirements.
E. This decision shall be recorded at the Barnstable Registry of Deeds.
F. Conformance with all review procedure requirements outlined pursuant to §400-18.G Inspection, certificate of completion and as-built plan, of the Code of the Town of Harwich shall be met.

***Alternatively,*** the Planning Board may approve the site plan special permit with or without additional conditions.

# TOWN OF HARWICH PLANNING DEPARTMENT

**PLANNING BOARD APPLICATION**
**SPECIAL PERMITS & SITE PLAN REVIEW FORM A**

**TO THE TOWN CLERK, HARWICH, MA** **DATE** December 1, 2020

## PART A – APPLICANT INFORMATION/AUTHORIZATION

| | |
|---|---|
| Applicant Name(s) | Wychmere Harbor Real Estate, LLC |
| Representative/Organization **(Who will serve as the primary contact responsible for facilitating this application?)** | Andrew L. Singer, Esq.<br>Law Office of Singer & Singer, LLC |
| Mailing address | c/o Law Office of Singer & Singer, LLC<br>P.O. Box 67 |
| Town, ST, Zip | Dennisport, MA 02639 |
| Phone | 508-398-2221 |
| Fax | 508-398-1568 |
| E-mail | alsinger@singer-law.com |

The applicant is one of the following: *(please check appropriate box)*
[x] Owner ☐ Prospective Buyer* ☐ Representative for Owner/Tenant/Buyer*
☐ Tenant* ☐ Other*_____

***Written permission of the owner(s) and a municipal lien certificate (where applicable) is required.***

All other forms and information as required in the Harwich Code Chapter 400, Rules and Regulations, shall be submitted as part of this application.

### Authorization

Your signature hereby asserts, to the best of your knowledge, that the information submitted in this application is true and accurate; that you agree to fully comply with the Town of Harwich Zoning By-laws and the terms and conditions of any approval of this application by the Planning Board; and authorizes the Members of the Planning Board and/or Town Staff to visit and enter upon the subject property for the duration of the consideration of this application.

Wychmere Harbor Real Estate, LLC

Applicant By: Andrew L. Singer, Esq.

Owner(s) – Authorization must accompany application if the owner is not the applicant.

*Official use only:*

| PLANNING DEPARTMENT | TOWN CLERK |
|---|---|
| Case # | |

## PART B – PROJECT LOCATION

| | | | |
|---|---|---|---|
| Legal Street Address | 23 Snow Inn Road, Unit 12 | Village/Zip Code | Harwichport |
| Title Book/Page or L.C.C. # | Book 24547, Page 55 | | |
| Map(s) / Parcel(s) | Map 8, Parcel P-2 -12 | | |
| Zoning & Overlay Districts | RH-3 and RL | *Historic? | |
| Frontage (linear feet) | See Plans and Narrative | | |
| Total land area (s.f.) | | | |
| Upland (s.f.) | | Wetlands (s.f.) | |

## PART C – PROJECT DESCRIPTION

| | | | |
|---|---|---|---|
| Existing Floor Area in Sq. Ft | Gross: | See Plans and Narrative | Net: |
| Proposed Floor Area in Sq. Ft | Gross: | | Net: |
| Change in Sq. Ft + / - | Gross: | | Net: |
| Existing # of parking spaces | See Plan & Narrative | Proposed # of parking spaces: | See Plan & Narrative |
| Existing Use(s) | Recreation and Amusement Services & Restaurant - Beach Club | | |
| Proposed Use(s) *Attach a separate narrative if necessary.* | Proposed uses are same as existing uses | | |

The undersign hereby files an application with the Harwich Planning Board for the following special permits as proposed under the provisions of the Harwich Zoning Code: (***check all that apply***)

**Site Plan Review § 325-55:**

☒ Any floor area expansion of any structure or expansion of exterior space, other than parking, serving any of the following: commercial, industrial, multi-family or educational use or personal wireless service facility or the creation of a drive-up or drive-through window

☐ Expansion or reconfiguration of an existing parking lot and/or driveway(s) serving said parking lot.

☐ Establishment of any new commercial, industrial, multi-family, educational, fast food/take out restaurant or personal wireless service facility.

☐ Establishment of any new retail use(s) in the Industrial (IL) Zone.

☐ Waiver of Site Plan § 325-55.F

**Article V, Use Regulations:**

☐ Paragraph_____, sub-paragraph #_____ ☐ Paragraph_____, sub-paragraph #_____

☐ Paragraph_____, sub-paragraph #_____, supplemental regulation #_____ § 325-14

**Article X, Special Permits:**

☒ Structures w/ gross floor area of 7,500+ s.f. § 325-51

☐ Structures requiring 20 or more new parking spaces § 325-51

☐ Accessory Apt./Shared Elderly Housing § 325-51.H ☐ Mixed Use § 325-51.M

☐ Drinking Water Resource Protection § 325-51.C ☐ Two Family § 325-51.N

☐ Village Commercial, Harwich Port § 325-51.L ☐ *Harwich Center Overlay § 325-51.O

☐ Signage § 325-27.F Additional Cluster, Excess SF, Non-entry Facades

**Other Special Permits:**

☐ Six Ponds Special District - Article XVI

☐ Wind Energy Systems - Article XVIII ☐ Large Scale Wind Generation – Article XIX

☐ Other (i.e. Alternate Access § 325-18.P, Special Cases § 325-44.B) _____

☐ Repetitive Petition (MGL Ch 40A, §16): Proposed project evolved from a previously denied plan submitted to the Planning Board on _____Year/Case # _____

**Note: Projects within the Harwich Center Overlay District may also be within the Harwich Center Historic District. This requires separate filing with the Historic District and Historical Commission. Please inquire for forms and instructions.*

# Town of Harwich
# Planning Board

Applicant: Wychmere Harbor Real Estate, LLC
Property: 23 Snow Inn Road, Harwichport, MA

Applicant/Property. The Applicant, Wychmere Harbor Real Estate, LLC, owns the Wychmere Beach Club located at 23 Snow Inn Road in Harwichport. The Property, which is shown as Parcel P-2 on Harwich Assessors Map 8, is currently improved with the buildings, amenities, and facilities that comprise the Wychmere Beach Club, including the Snow Inn Hotel and Channel House, and the separate Wychmere Shores residences.

Proposal. The Applicant is seeking permission to further amend the Special Permit Decision granted earlier this year in Case Nos. 2019-27 and 2020-23, or in the alternative, a new Special Permit, to make additional alterations to the previously-approved design of the redeveloped Beach Club at the southern end of the Property--redesignate the approved "infant pool" to "young adult pool," add an infant pool, create a fenced, natural-lawn service alley along the east side, and make accompanying landscape and walkway revisions. There will be no change to the previously-approved buildings or use.

VIA USPS & EMAIL

January 8, 2021

Thomas A. Cosmer
Lonnie A. Cosmer
23 Davis Lane
Harwich, MA 02646

Ms. Charlene Greenhalgh
Town Planner
Town of Harwich
732 Main Street
Harwich, MA 02645

Re: PB2020-32, PB2019-27, PB2020-23 Wychmere Harbor Real Estate LLC

Members of the Harwich Planning Board –

We have lived in Harwich for thirty years and own a home adjacent to the Beach Club that is included on the abutter list. Thank you for receiving this letter and incorporating same in your deliberations.

We believe the Applicant intends to make club property available to the general public, contrary to their practice since acquiring the club in 2010, and contrary to their claims and assertions related to this Planning Board application dating back to 2019. Please recall the Applicant's well documented position in February 2020 when you voted to approve their application:

- ***"There will be no change in the existing private Beach Club use at the Property, and the Beach Club will continue to be a private facility. The replacement Beach Grill dining facilities will not be open to the general public, and there will be no change in the approved density and use on the Property".***

  ***(Please see ZBA approval dated 2/11/20, item #1, page 3 – and included as page #10 in the Harwich Planning Board meeting packet dated 2/25/20).***

Since the Applicant's pledge to maintain private Beach Club use at the Property was a key factor in your deliberations when you voted in favor of the project nearly eleven months ago, we request that a member of the Planning Board, at the January 12, 2021 meeting, ask the applicant to simply reaffirm this important position. Applicant should be able to easily assert for the record, as they did previously to gain your support, that the Beach Club will continue to be a private facility, and that the replacement Beach Grill dining facilities will not be open to the general public.

Respectfully submitted,

Tom & Lonnie Cosmer

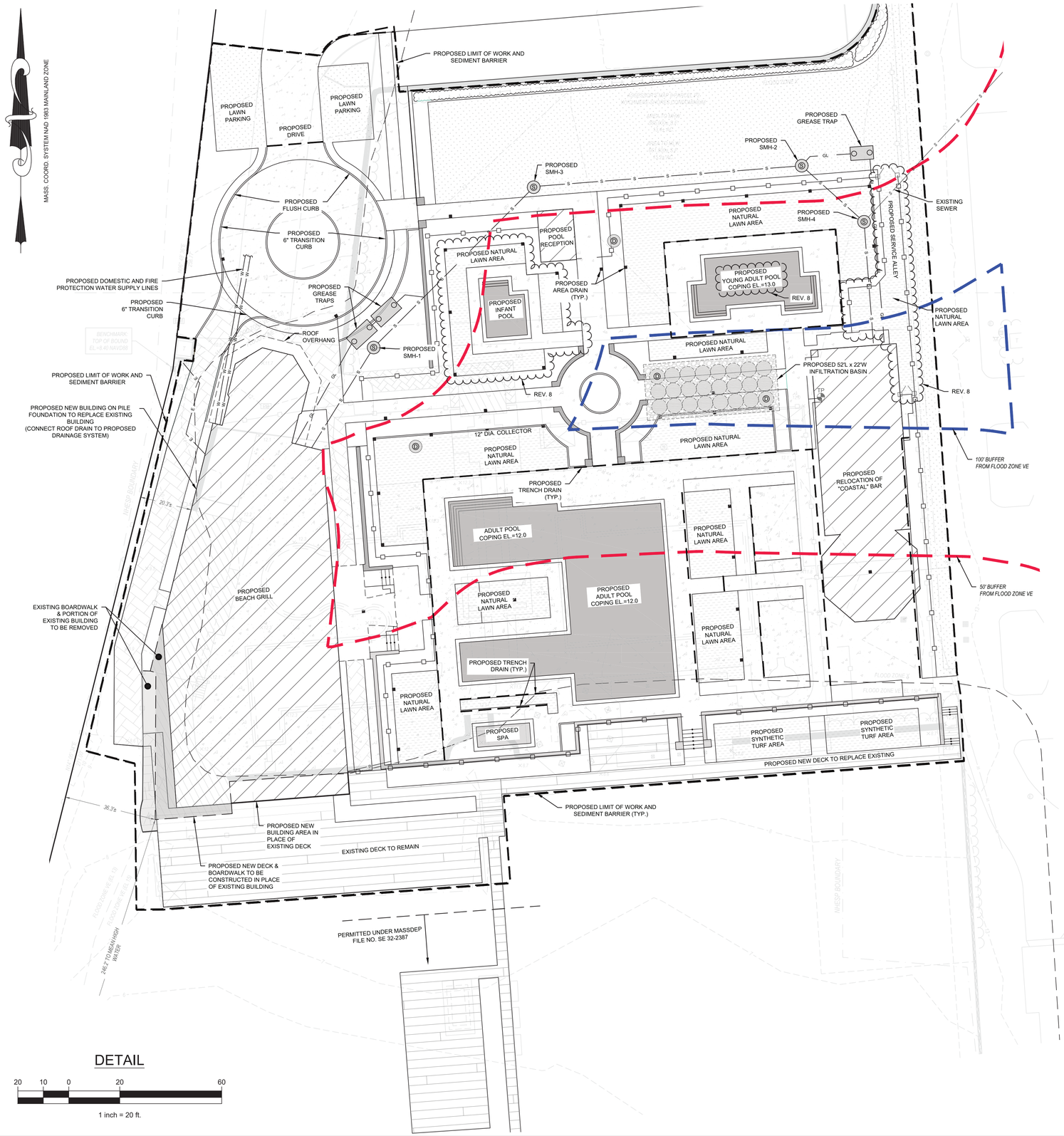


## DETAIL

20 10 0 20 60

1 inch = 20 ft.

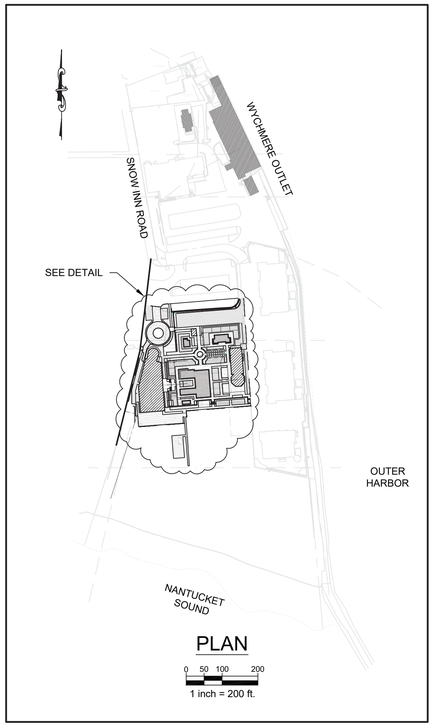


## PLAN

0 50 100 200

1 inch = 200 ft.

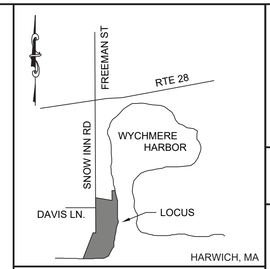


## KEY MAP

NO SCALE

## REFERENCE:

ASSESSORS MAP 8, PARCEL P2

DEED BOOK 24547, PAGE 55

PLAN BOOK 634, PAGES 57-66

## FLOOD ZONE:

FLOOD ZONE VE (EL 15, EL 14 & EL 13), ZONE AE (EL 11 & EL 12), & ZONE X AS SHOWN ON FEMA FIRM PANEL #25001C0612J EFFECTIVE JULY 16, 2014. COMMUNITY FLOOD PLANE MANAGERS SHALL CONFIRM LOCATION OF SITE SPECIFIC FLOOD PLANE BOUNDARIES. PRIOR TO DESIGNING STRUCTURES. A CONDITIONAL LETTER OF MAP AMENDMENT (CLOMA) DETERMINATION SHOULD BE APPLIED FOR TO CONFIRM FLOOD INSURANCE REQUIREMENTS.

## DATUM:

ELEVATIONS SHOWN HEREON ARE BASED ON THE NORTH AMERICAN VERTICAL DATUM OF 1988 (NAVD 1988)

## OWNER:

WYCHMERE HARBOR REAL ESTATE, LLC
23 SNOW INN ROAD
HARWICHPORT, MA 02646

## LEGEND

| EXISTING | PROPOSED |
|---|---|
| BOUND | AREA DRAIN |
| LIGHT POLE | FENCING |
| TRANSFORMER | DRAIN MANHOLE |
| ELECTRIC METER | DRAIN LINE |
| PULL BOX | SEWER MANHOLE |
| SEWER MANHOLE | GREASE LINE |
| CONTOUR | SEWER LINE |
| SPOT GRADE | |
| STOCKADE FENCE | |

SEE PLANS BY HAWK DESIGN, INC. FOR PROPOSED HARDSCAPE AND LANDSCAPE LAYOUT AND MATERIALS, AND PROPOSED GRADING

ZONING DISTRICT: RH-3 (RESIDENTIAL-HIGH DENSITY) AND R-L (RESIDENTIAL - LOW DENSITY) (1)

USE GROUP: PARAGRAPH IV - USE: 30 (RECREATION AND AMUSEMENT SERVICES)
32 (RESTAURANT OR LOUNGE)

| | SUBJECT | REQUIRED | EXISTING | PROPOSED |
|---|---|---|---|---|
| | LOT AREA (TO M.L.W.) | 40,000 S.F. MINIMUM | 661,500 S.F. (3) | NO CHANGE |
| | FRONTAGE | 150 FT MINIMUM | 447.91 FT | NO CHANGE |
| (2) | FRONT SETBACK (BUILDING) | 25 FT MINIMUM | 301.9± FT | 257± FT |
| (2) | SIDE SETBACK (BUILDING) | 20 FT MINIMUM | 20.3± FT (4) | NO CHANGE |
| (2) | REAR SETBACK (BUILDING) | 20 FT MINIMUM | 246.2± FT (TO MHW) | NO CHANGE |
| | BUILDING COVERAGE | 15% MAXIMUM | 10.2% (67,683± S.F.) | 11.5% (76,217± S.F.) |
| | AMENITIES COVERAGE | 15% MAXIMUM | 29.9% (197,824± S.F.) | 28.4% (187,566± S.F.) |
| | SITE COVERAGE (TOTAL) | 35% MAXIMUM | 40.1% (265,507± S.F.) | 39.9% (263,783± S.F.) |
| | GREEN SPACE | 15% MINIMUM | 59.9% (395,993± S.F.) | 60.3% (398,653± S.F.) |
| | BUILDING HEIGHT | 50 FT & 4 STORIES MAXIMUM | --- | SEE ARCH. PLANS |

REV. 8

(1) THIS PROJECT IS LOCATED ENTIRELY WITHIN THE RH-3 ZONING DISTRICT.
(2) REQUIRED SETBACKS SHOWN ARE FOR RH-3 ZONING DISTRICT.
(3) CEC SURVEY AUGUST 15, 2019.
(4) ROOF OVERHANG AT NORTHWEST CORNER OF BEACH GRILL BUILDING PROJECTS INTO SIDE YARD SETBACK 1.4'± < 2' ALLOWED (325-18 F.(3))

ISSUED FOR PLANNING BOARD AND ZBA REVIEW


COASTAL engineering co.
260 Cranberry Hwy, Orleans, MA 02653
508.255.6511 P 508.255.6700 F


| NO. | DATE | REVISION | BY |
|---|---|---|---|
| 8 | 11/30/2020 | RE-DESIGNATE "INFANT POOL" TO "YOUNG ADULT POOL" ADD INFANT POOL, CREATE S/O ALLEY ON EAST | ELN |
| 7 | 08/28/2020 | UPDATE FOR HARDSCAPE/LANDSCAPE REVISIONS; UPDATE ZONING TABLE | CEM |
| 6 | 08/21/2020 | UPDATES TO MATCH LANDSCAPE PLAN; UPDATE ZONING TABLE | CEM |
| 5 | 07/30/2020 | REVISIONS TO BUILDINGS & AMENITIES | MJB |
| 4 | 02/10/2020 | CHANGE SYNTHETIC TURF TO NATURAL LAWN AT POOL PATIO LEVEL | CEM |
| 3 | 01/17/2020 | UPDATE LOT AREA AND COVERAGE AREAS IN ZONING TABLE | CPM |
| 2 | 12/20/2019 | REVISE PROPOSED POOL AREA AND DRAINAGE | CPM |
| 1 | 07/02/2019 | UPDATE PROPOSED BUILDING FOOTPRINT, POOL LOCATIONS, AND UTILITIES | TRG |

SEAL

COMMONWEALTH OF MASSACHUSETTS
DAVID J. MICHNIEWICZ
CIVIL
NO. 31961

PROJECT
WYCHMERE HARBOR REAL ESTATE, LLC
23 SNOW INN ROAD HARWICH PORT, MA

SHEET TITLE
PROPOSED BUILDING AND SITE IMPROVEMENTS AT WYCHMERE BEACH CLUB

| | |
|---|---|
| SCALE | AS NOTED |
| DRAWING FILE | C15766-C.dwg |
| DATE | ~~6/12/2019~~ |
| DRAWN BY | TRG/CEM/MJB |
| CHECKED BY | DJM |

C2.2.1

1 OF 1 SHEETS

PROJECT NO. C15766.05

Coastal Engineering Co., Inc. © 2020

F:\SDSKPROJ\C15000\C15766\C15766-05\C15766-C.dwg 11/25/2020 4:32 PM

# Wychmere Beach Club

22 Snow Inn Rd, Harwich Port, MA

## Landscape Submission Set

LIST OF DRAWINGS:

| | | Set Date | Revision Date | Revision Date |
|---|---|---|---|---|
| L1.0 | Overall Site Plan | 02/11/20 | 08/28/20 | 11/30/20 |
| L1.1 | Materials Enlargement Plan | 08/28/20 | | 11/30/20 |
| L1.2 | Materials Enlargement Plan | 08/28/20 | | 11/30/20 |
| L2.0 | Planting Site Plan | 02/11/20 | 08/28/20 | 11/30/20 |
| L2.1 | Planting Enlargement Plan | 11/30/20 | | |
| L2.2 | Planting Enlargement Plan | 11/30/20 | | |
| L3.0 | Lighting Site Plan | 02/11/20 | 08/28/20 | 11/30/20 |
| L3.1 | Lighting Enlargement Plan | 08/28/20 | | 11/30/20 |
| L3.2 | Lighting Enlargement Plan | 08/28/20 | | 11/30/20 |
| L4.0 | Grading Site Plan | 08/28/20 | | 11/30/20 |
| L4.1 | Grading Enlargement Plan | 08/28/20 | | 11/30/20 |
| L4.2 | Grading Enlargement Plan | 08/28/20 | | 11/30/20 |
| D1.0 | Construction Details | 02/11/20 | 08/28/20 | 11/30/20 |
| D1.1 | Construction Details | 11/30/20 | | |
| D2.0 | Lighting Specifications | 02/11/20 | 08/28/20 | 11/30/20 |

Prepared By:

**Hawk Design, Inc.**
Landscape Architecture
Land Planning

Sagamore, MA
508-833-8800
info@hawkdesigninc.com

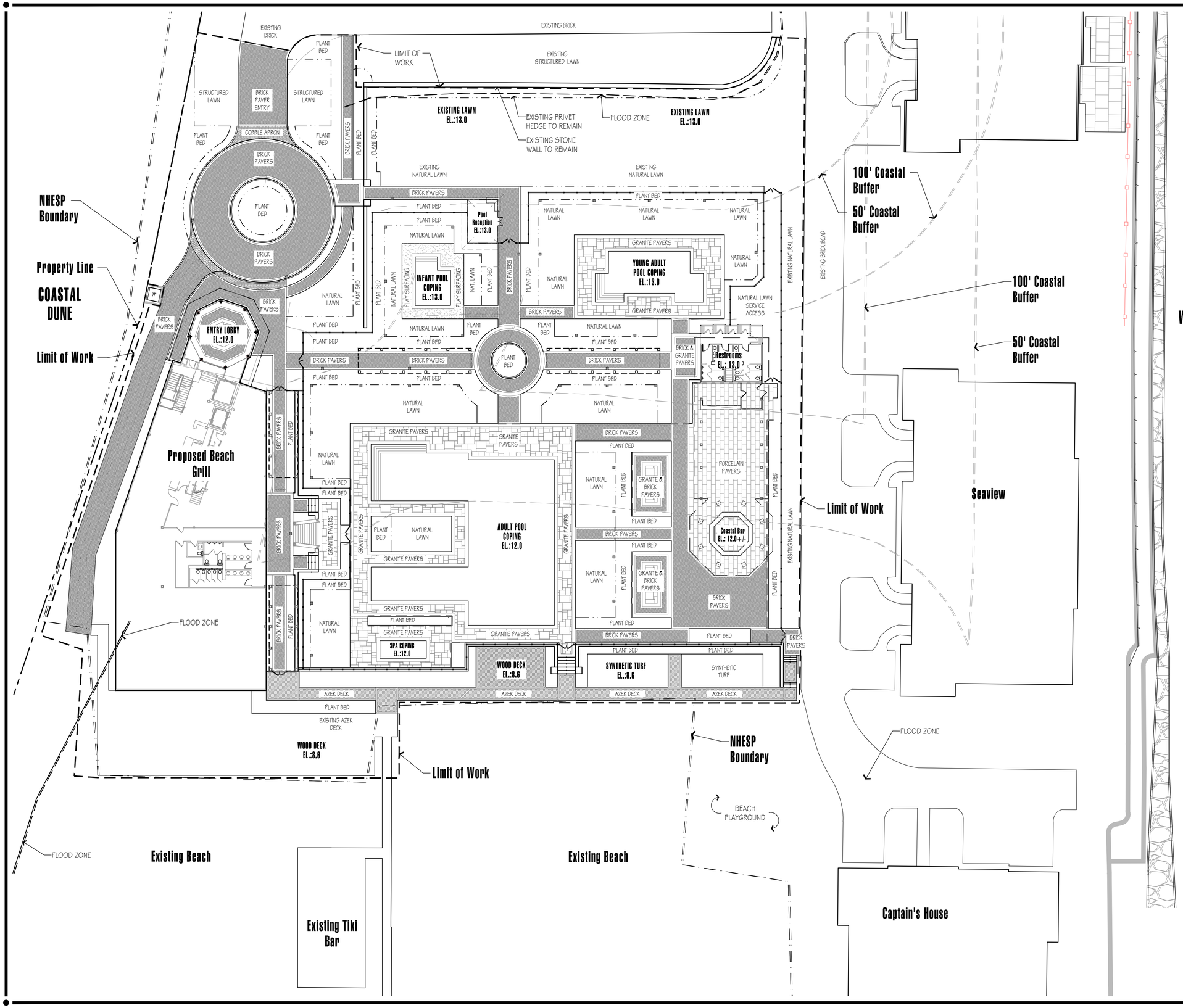


NOTES:
1. SEE SHEET D1.0 FOR CONSTRUCTION DETAILS
2. SEE SHEET L1.1 & L1.2 FOR PLAN ENLARGEMENTS

0 20 40 60 feet
SCALE: 1" = 20'

Base information provided electronically by Coastal Engineering of Orleans, Massachusetts


**Hawk Design, Inc.**
Landscape Architecture
Land Planning
Sagamore, MA
508-833-8800
info@hawkdesigninc.com
www.hawkdesigninc.com



HAWK DESIGN, INC. 2019

THIS DRAWING AND ALL INFORMATION CONTAINED HEREON IS PROPRIETARY INFORMATION OF HAWK DESIGN, INC. AND MAY NOT BE COPIED OR REPRODUCED, EITHER IN WHOLE OR IN PART, BY ANY METHOD, WITHOUT WRITTEN PERMISSION OF HAWK DESIGN, INC.


Date: 02/11/20

**Revisions:**

| Num. | Date | Description |
|---|---|---|
| 1. | 08/28/20 | |
| 2. | 11/30/20 | |

MASSACHUSETTS THOMAS E. HAWK REGISTERED LANDSCAPE ARCHITECT NO. 918
11/30/20

# Wychmere Beach Club

22 Snow Inn Rd, Harwich Port, MA
Wychmere Harbor Real Estate LLC

Drawn By: TM | Checked By: DH

**Overall Site Plan**

Scale: 1" = 20'-0"

Sheet: **L1.0**

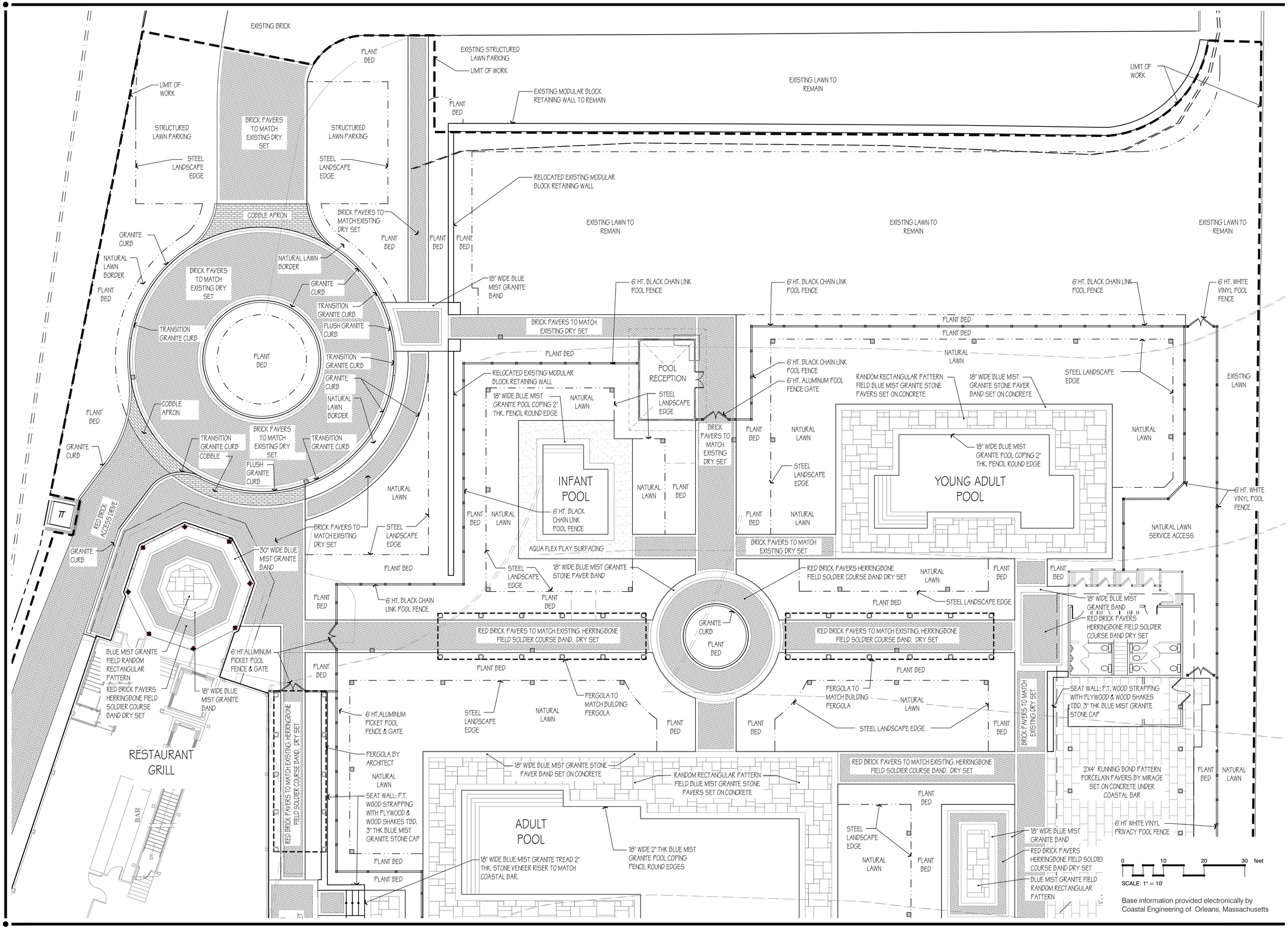


Base information provided electronically by Coastal Engineering of Orleans, Massachusetts


**Hawk Design, Inc.**
Landscape Architecture
Land Planning
Sagamore, MA
508-833-8800
info@hawkdesigninc.com
www.hawkdesigninc.com



HAWK DESIGN, INC. 2019

THIS DRAWING AND ALL INFORMATION CONTAINED HEREON IS PROPRIETARY INFORMATION OF HAWK DESIGN, INC. AND MAY NOT BE COPIED OR REPRODUCED, EITHER IN WHOLE OR IN PART, BY ANY METHOD, WITHOUT WRITTEN PERMISSION OF HAWK DESIGN, INC.


Date: 08/28/20

**Revisions:**

| Num. | Date | Description |
|---|---|---|
| 1. | 11/30/20 | |

MASSACHUSETTS THOMAS E. HAWK NO. 918 REGISTERED LANDSCAPE ARCHITECT

11/30/20

# Wychmere Beach Club

22 Snow Inn Rd, Harwich Port, MA

Wychmere Harbor Real Estate LLC

Drawn By: TM | Checked By: TM

## Materials Enlargement Plan

Scale: 1"=10'-0"

Sheet: L1.1

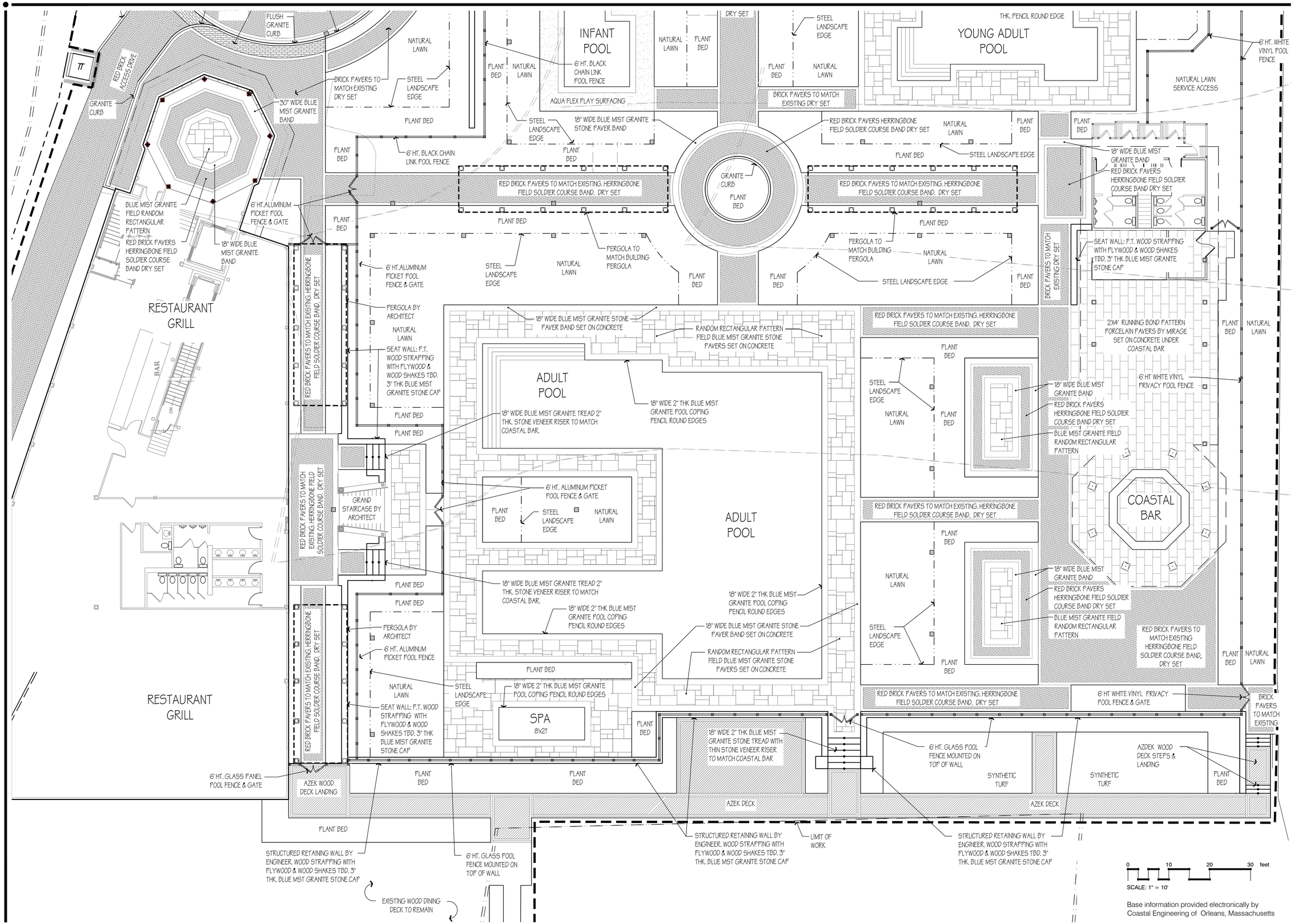


Base information provided electronically by Coastal Engineering of Orleans, Massachusetts


**Hawk Design, Inc.**
Landscape Architecture
Land Planning
Sagamore, MA
508-833-8800
info@hawkdesigninc.com
www.hawkdesigninc.com



HAWK DESIGN, INC. 2019

THIS DRAWING AND ALL INFORMATION CONTAINED HEREON IS PROPRIETARY INFORMATION OF HAWK DESIGN, INC. AND MAY NOT BE COPIED OR REPRODUCED, EITHER IN WHOLE OR IN PART, BY ANY METHOD, WITHOUT WRITTEN PERMISSION OF HAWK DESIGN, INC.


**Date: 08/28/20**

**Revisions:**

| Num. | Date | Description |
|---|---|---|
| 1. | 11/30/20 | |

MASSACHUSETTS THOMAS E. HAWK REGISTERED LANDSCAPE ARCHITECT NO. 918

11/30/20

# Wychmere Beach Club

22 Snow Inn Rd, Harwich Port, MA

Wychmere Harbor Real Estate LLC

Drawn By: TM | Checked By: DH

## Materials Enlargement Plan

Scale: 1" = 10'-0"

Sheet: **L1.2**

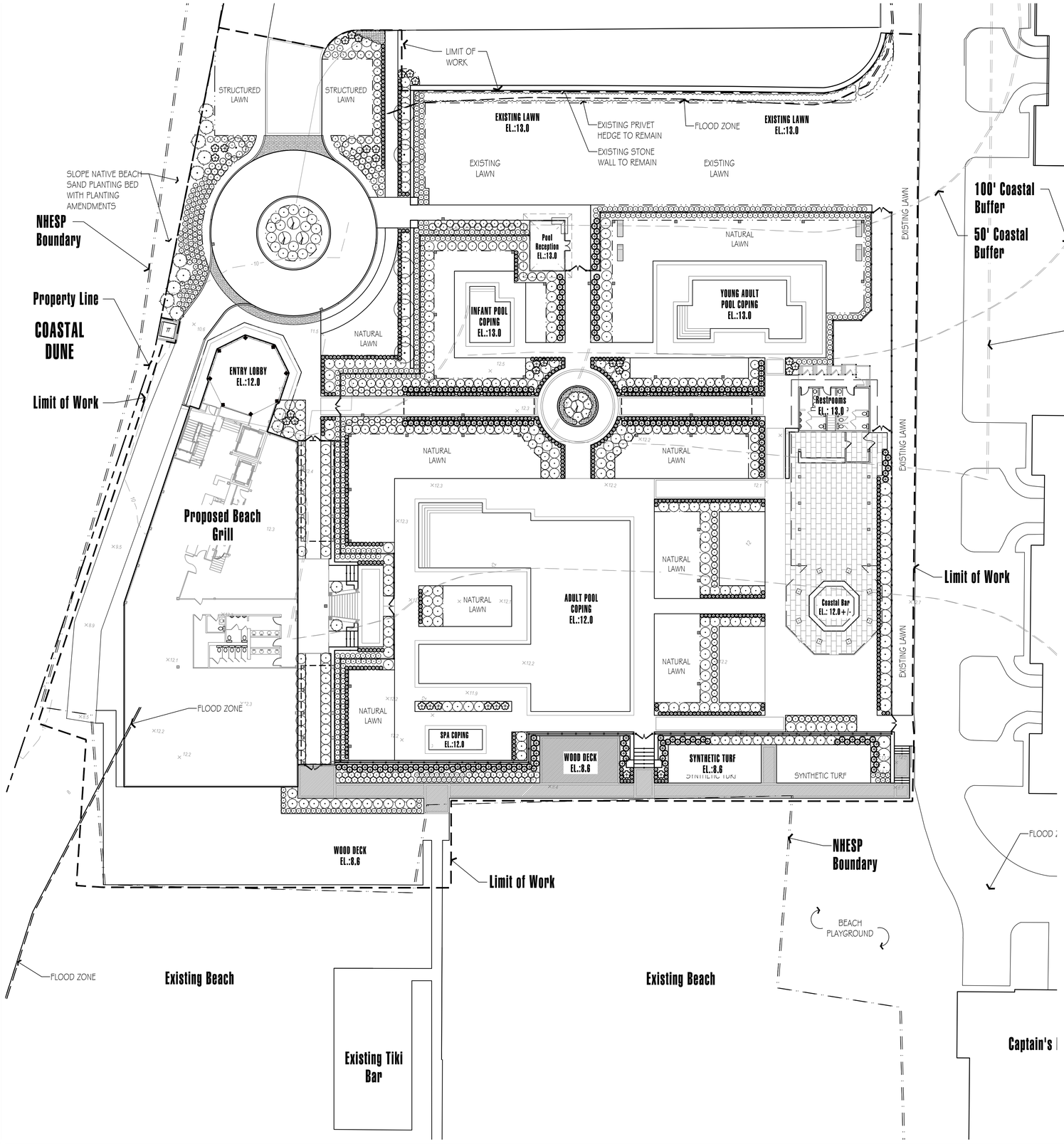


0 20 40 60 feet

SCALE: 1" = 20'

## Conservation Notes

1. ALL WORK TO BE PERFORMED IN STRICT ACCORDANCE WITH THE DEP ORDER OF CONDITIONS IN ADDITION TO ALL LOCAL ORDINANCES, INCLUDING ANY SPECIAL CONDITION REQUESTS BY THE TOWN OF HARWICH CONS COMM.
2. NO HERBICIDES, FERTILIZER OR PESTICIDES SHALL BE USED WITHIN THE WETLAND BUFFERS OF SUBJECT PROPERTY UNLESS APPROVED BY THE TOWN OF HARWICH CONS COMM.
3. NO PRUNING OR VEGETATIVE CLEANING WITHIN THE WETLAND BUFFERS UNLESS UNDER THE DIRECTION OF THE CONSERVATION AGENT.
4. A BUFFER ZONE OF NATURAL VEGETATION SHALL BE LEFT UNDISTURBED OUTSIDE THE WORK LIMIT AREA.
5. PERMANENT DRIP IRRIGATION SYSTEM WILL BE INSTALLED FOR ALL PROPOSED PLANTINGS OR AS DIRECTED BY THE CONSERVATION COMMISSION. EXISTING LAWN TO REMAIN SHALL HAVE SPRAY HEAD IRRIGATION INSTALLED.
6. NATIVE LAWN SEED MIX TO BE MICRO CLOVER /BLACK BEAUTY PLAYERS BEST SEED MIX. SEED MIX MAY CONTAIN: GOLCONDA TALL FESCUE, DORADO TALL FESCUE, MONTANA TALL FESCUE, DEEPBLUE KENTUCKY BLUEGRASS, SFF 30 HYBRID BLUEGRASS, PROSPERITY KENTUCKY BLUEGRASS, SINGULAR PERENNIAL RYEGRASS, FRONTIER PERENNIAL RYEGRASS, MICRO CLOVER WHITE CLOVER.
7. PRIOR TO ANY WORK BEING PERFORMED, THE LANDSCAPE CONTRACTOR SHALL REQUEST AN ON SITE MEETING WITH THE CONSERVATION AGENT TO REVIEW THE ORDER OF CONDITIONS.
8. MITIGATION BEDS SHALL BE TOP DRESSED WITH STONE MULCH OR PEA GRAVEL. NATIVE LAWN SHALL BE MOWED.

## OVERALL SITE PLANT SCHEDULE

| SHRUBS | QTY | BOTANICAL NAME | COMMON NAME | CONT | SIZE |
|---|---|---|---|---|---|
| CO | 5 | Chamaecyparis obtusa | Hinoki False Cypress | B & B | 4-5` HT. |
| HA-IN | 24 | Hydrangea arborescens `Incrediball` | Incrediball White Hydrangea | B & B | 3` HT. |
| HN | 209 | Hydrangea macrophylla `Nantucket Blue` | Nantucket Blue Hydrangea | B & B | 3` HT. |
| HP-L | 7 | Hydrangea paniculata `Limelight` Tree Form | Limelight Hydrangea | B & B | 5-6` HT. |
| IC-BC | 18 | Ilex crenata `Bennett`s Compacta" | Bennetts Compact Holly | B & B | 3` HT. |
| IG-S | 108 | Ilex glabra `Shamrock` | Inkberry | B & B | 4` HT. |
| JC-BP | 74 | Juniperus conferta `Blue Pacific` | Blue Pacific Shore Juniper | 3 GAL | |
| JT | 10 | Juniperus chinensis `Torulosa` | Hollywood Juniper | B & B | 8 HT. |
| LO | 464 | Ligustrum ovalifolium | California Privet | B & B | 5` HT. |
| MP | 21 | Myrica pensylvanica | Northern Bayberry | B & B | 5` HT. |
| PM-BP | 25 | Prunus maritima | Beach Plum | B & B | 2.5-3` HT |
| R-AD | 55 | Rosa x `Apricot Drift` | Apricot Drift Rose | 3 GAL | |
| RP-TF | 17 | Rosa polyanthia "The Fairy Rose" | Fairy Rose | B & B | 2` HT. |
| SI-HN | 4 | Salix integra `Hakura Nishiki` | Dappled Willow Tree Form | B & B | 6` HT. |
| SJ-LP | 32 | Spiraea japonica `Little Princess` | Little Princess Spirea | B & B | 2` HT. |

| GRASSES | QTY | BOTANICAL NAME | COMMON NAME | CONT | SIZE |
|---|---|---|---|---|---|
| G-DT | 155 | Deschampsia cespitosa | Tufted Hair Grass | 2 gal | |
| G-MM | 32 | Miscanthus sinensis `Morning Light` | Morning Light Silver Grass | 5 GAL | |
| G-PN | 231 | Panicum virgatum `North Wind` | Northwind Switch Grass | 3 GAL | |
| PA-LB | 635 | Pennisetum alopecuroides `Little Bunny` | Little Bunny Fountain Grass | 2 gal | |

| GROUND COVERS | QTY | BOTANICAL NAME | COMMON NAME | CONT | SPACING |
|---|---|---|---|---|---|
| RF-LG | 31 | Rudbeckia fulgida `Goldstrum` | Black-eyed Susan | 2 GAL. | 24" o.c. |

Base information provided electronically by
Coastal Engineering of Orleans, Massachusetts


**Hawk Design, Inc.**
Landscape Architecture
Land Planning
Sagamore, MA
508-833-8800
info@hawkdesigninc.com
www.hawkdesigninc.com



HAWK DESIGN, INC. 2019

THIS DRAWING AND ALL INFORMATION CONTAINED HEREON IS PROPRIETARY INFORMATION OF HAWK DESIGN, INC. AND MAY NOT BE COPIED OR REPRODUCED, EITHER IN WHOLE OR IN PART, BY ANY METHOD, WITHOUT WRITTEN PERMISSION OF HAWK DESIGN, INC.


Date: 02/11/20

**Revisions:**

| Num. | Date | Description |
|---|---|---|
| 1. | 08/28/20 | |
| 2. | 11/30/20 | |

MASSACHUSETTS THOMAS E. HAWK REGISTERED LANDSCAPE ARCHITECT NO. 918

11/30/20

# Wychmere Beach Club

22 Snow Inn Rd., Harwich Port, MA

Wychmere Harbor Real Estate LLC

Drawn By: TM | Checked By: DH

**Overall Site Planting Plan**

Scale: 1"=20'-0"

Sheet: L2.0

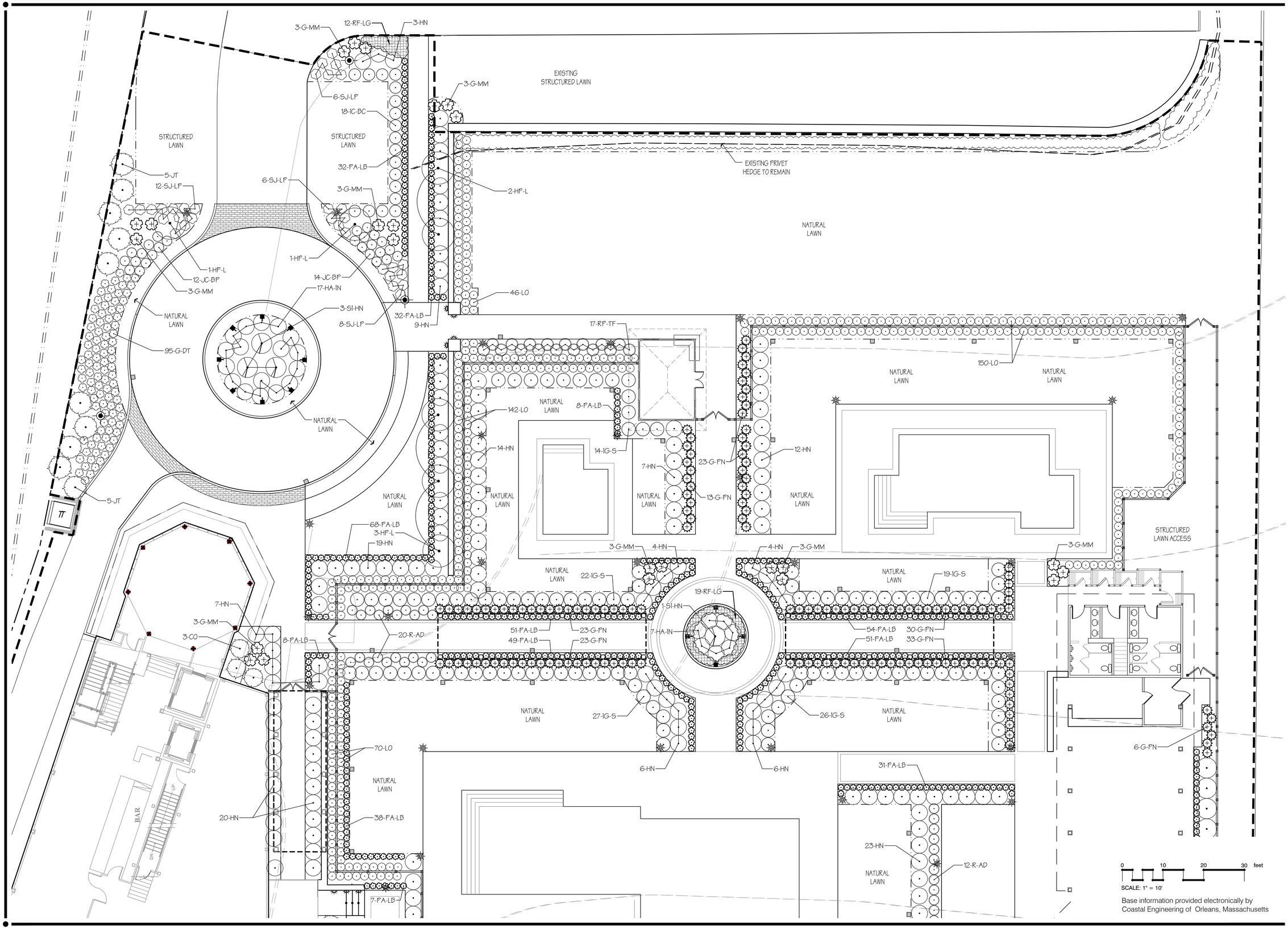


Base information provided electronically by Coastal Engineering of Orleans, Massachusetts


**Hawk Design, Inc.**
Landscape Architecture
Land Planning
Sagamore, MA
508-833-8800
info@hawkdesigninc.com
www.hawkdesigninc.com



HAWK DESIGN, INC. 2019

THIS DRAWING AND ALL INFORMATION CONTAINED HEREON IS PROPRIETARY INFORMATION OF HAWK DESIGN, INC. AND MAY NOT BE COPIED OR REPRODUCED, EITHER IN WHOLE OR IN PART, BY ANY METHOD, WITHOUT WRITTEN PERMISSION OF HAWK DESIGN, INC.


Date: 11/30/20

Revisions:

| Num. | Date | Description |
|---|---|---|

MASSACHUSETTS THOMAS E. HAWK REGISTERED LANDSCAPE ARCHITECT NO. 918

11/30/20

# Wychmere Beach Club

22 Snow Inn Rd, Harwich Port, MA

Longwood Venues / Atlas Development

Drawn By: TM | Checked By: DH

## Planting Enlargement Plan

Scale: 1" = 10'-0"

Sheet: L2.1

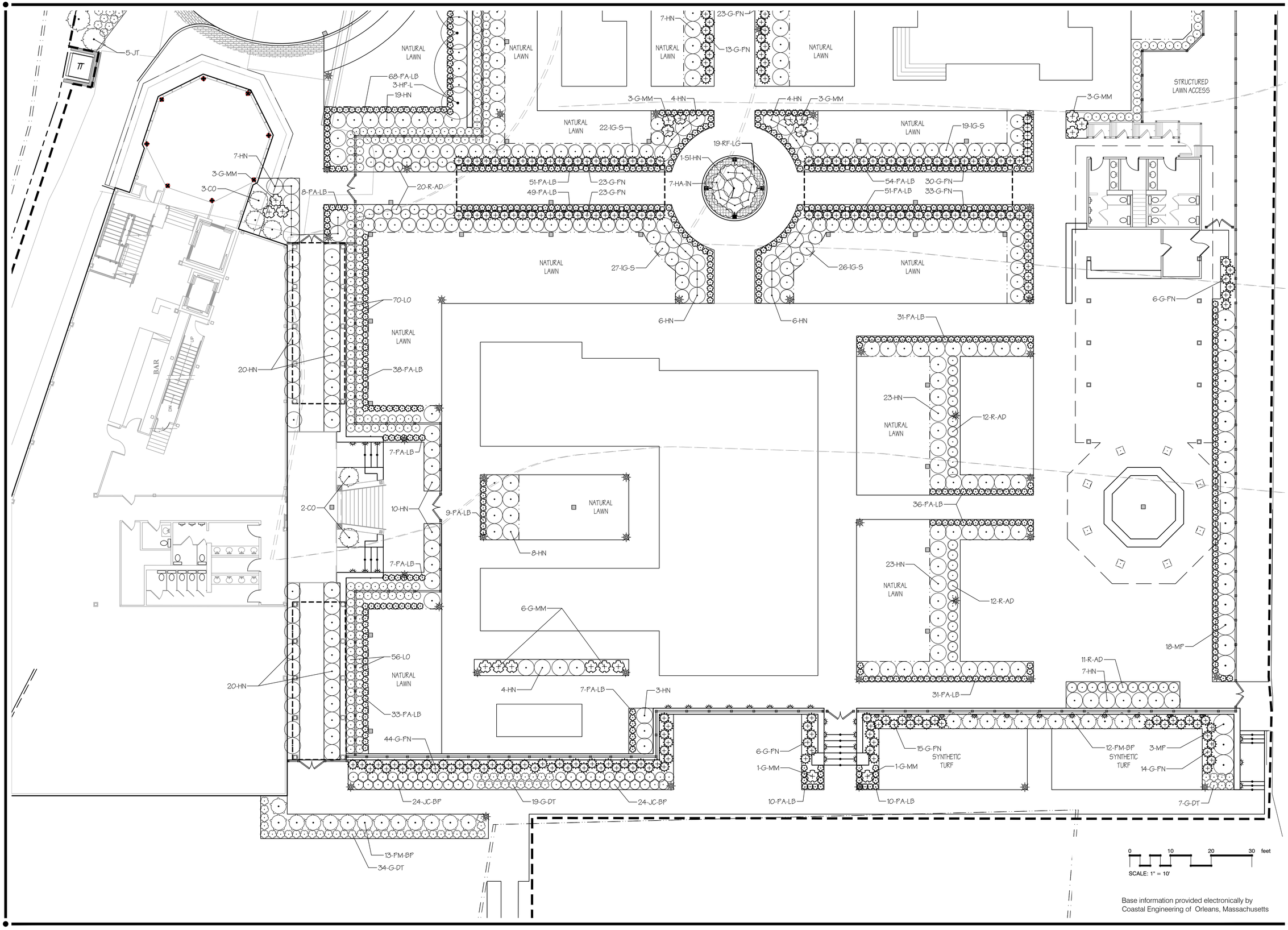


Base information provided electronically by
Coastal Engineering of Orleans, Massachusetts


**Hawk Design, Inc.**
Landscape Architecture
Land Planning
Sagamore, MA
508-833-8800
info@hawkdesigninc.com
www.hawkdesigninc.com



HAWK DESIGN, INC. 2019

THIS DRAWING AND ALL INFORMATION CONTAINED HEREON IS PROPRIETARY INFORMATION OF HAWK DESIGN, INC. AND MAY NOT BE COPIED OR REPRODUCED, EITHER IN WHOLE OR IN PART, BY ANY METHOD, WITHOUT WRITTEN PERMISSION OF HAWK DESIGN, INC.


Date: 11/30/20

Revisions:

| Num. | Date | Description |
|---|---|---|

MASSACHUSETTS THOMAS E. HAWK REGISTERED LANDSCAPE ARCHITECT NO. 918

11/30/20

# Wychmere Beach Club

22 Snow Inn Rd., Harwich Port, MA

Longwood Venues / Atlas Development

Drawn By: TM | Checked By: DH

## Planting Enlargement Plan

Scale: 1" = 10'-0"

Sheet: L2.2

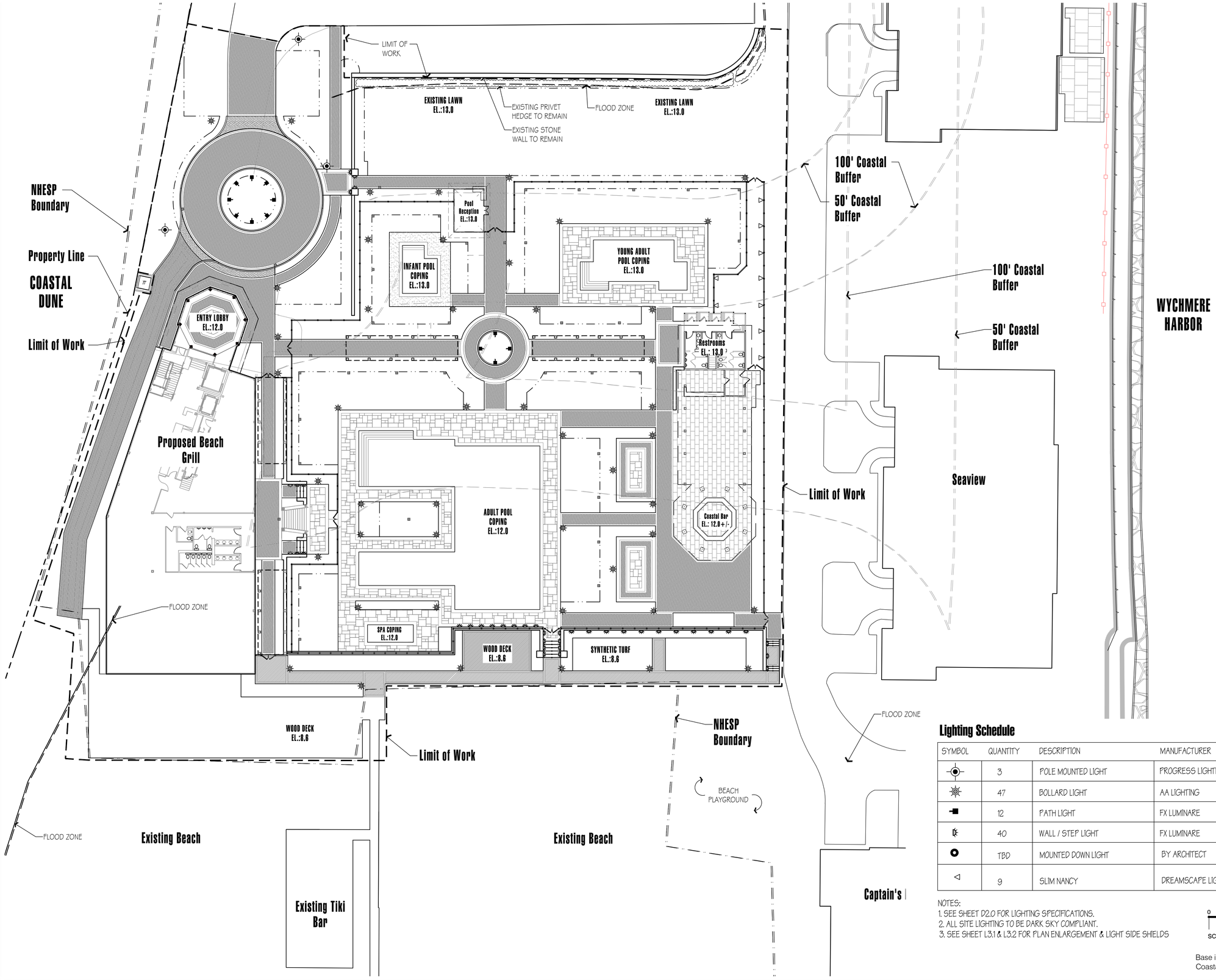


## Lighting Schedule

| SYMBOL | QUANTITY | DESCRIPTION | MANUFACTURER | SPECIFICATION |
|---|---|---|---|---|
| | 3 | POLE MOUNTED LIGHT | PROGRESS LIGHTING | TBD |
| | 47 | BOLLARD LIGHT | AA LIGHTING | TBD |
| | 12 | PATH LIGHT | FX LUMINARE | TBD |
| | 40 | WALL / STEP LIGHT | FX LUMINARE | TBD |
| | TBD | MOUNTED DOWN LIGHT | BY ARCHITECT | BY ARCHITECT |
| | 9 | SLIM NANCY | DREAMSCAPE LIGHTING | SLIM NANCY WHITE DLED-129-4 |

NOTES:
1. SEE SHEET D2.0 FOR LIGHTING SPECIFICATIONS.
2. ALL SITE LIGHTING TO BE DARK SKY COMPLIANT.
3. SEE SHEET L3.1 & L3.2 FOR PLAN ENLARGEMENT & LIGHT SIDE SHIELDS

0 20 40 60 feet
SCALE: 1" = 20'

Base information provided electronically by Coastal Engineering of Orleans, Massachusetts


**Hawk Design, Inc.**
Landscape Architecture
Land Planning
Sagamore, MA
508-833-8800
info@hawkdesigninc.com
www.hawkdesigninc.com



HAWK DESIGN, INC. 2019

THIS DRAWING AND ALL INFORMATION CONTAINED HEREON IS PROPRIETARY INFORMATION OF HAWK DESIGN, INC. AND MAY NOT BE COPIED OR REPRODUCED, EITHER IN WHOLE OR IN PART, BY ANY METHOD, WITHOUT WRITTEN PERMISSION OF HAWK DESIGN, INC.


Date: 02/11/20

**Revisions:**

| Num. | Date | Description |
|---|---|---|
| 1. | 08/28/20 | |
| 2. | 11/30/20 | |

MASSACHUSETTS THOMAS E. HAWK REGISTERED LANDSCAPE ARCHITECT NO. 918
11/30/20

# Wychmere Beach Club

22 Snow Inn Rd, Harwich Port, MA
Wychmere Harbor Real Estate LLC

Drawn By: TM | Checked By: DH

## Overall Site Lighting Plan

Scale: 1"=20'-0"

Sheet: L3.0

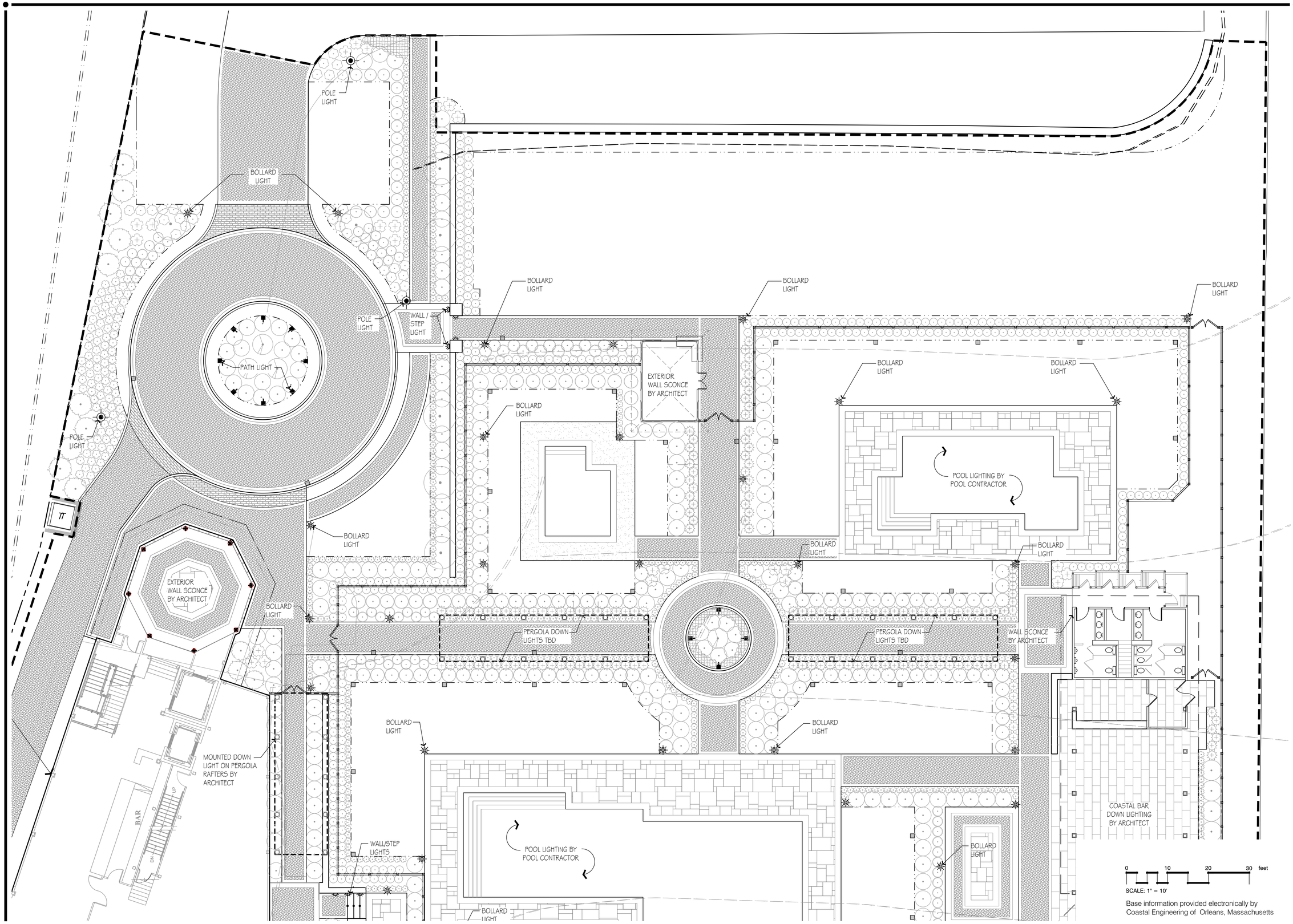


Base information provided electronically by Coastal Engineering of Orleans, Massachusetts


**Hawk Design, Inc.**
Landscape Architecture
Land Planning
Sagamore, MA
508-833-8800
info@hawkdesigninc.com
www.hawkdesigninc.com



HAWK DESIGN, INC. 2019

THIS DRAWING AND ALL INFORMATION CONTAINED HEREON IS PROPRIETARY INFORMATION OF HAWK DESIGN, INC. AND MAY NOT BE COPIED OR REPRODUCED, EITHER IN WHOLE OR IN PART, BY ANY METHOD, WITHOUT WRITTEN PERMISSION OF HAWK DESIGN, INC.


**Date: 08/28/20**

**Revisions:**

| Num. | Date | Description |
|---|---|---|
| 1. | 11/30/20 | |

MASSACHUSETTS THOMAS E. MEYER REGISTERED LANDSCAPE ARCHITECT NO. 918

11/30/20

# Wychmere Beach Club

22 Snow Inn Rd, Harwich Port, MA
Wychmere Harbor Real Estate LLC

Drawn By: TM | Checked By: DH

## Lighting Enlargement Plan

Scale: 1" = 10'-0"

Sheet: **L3.1**

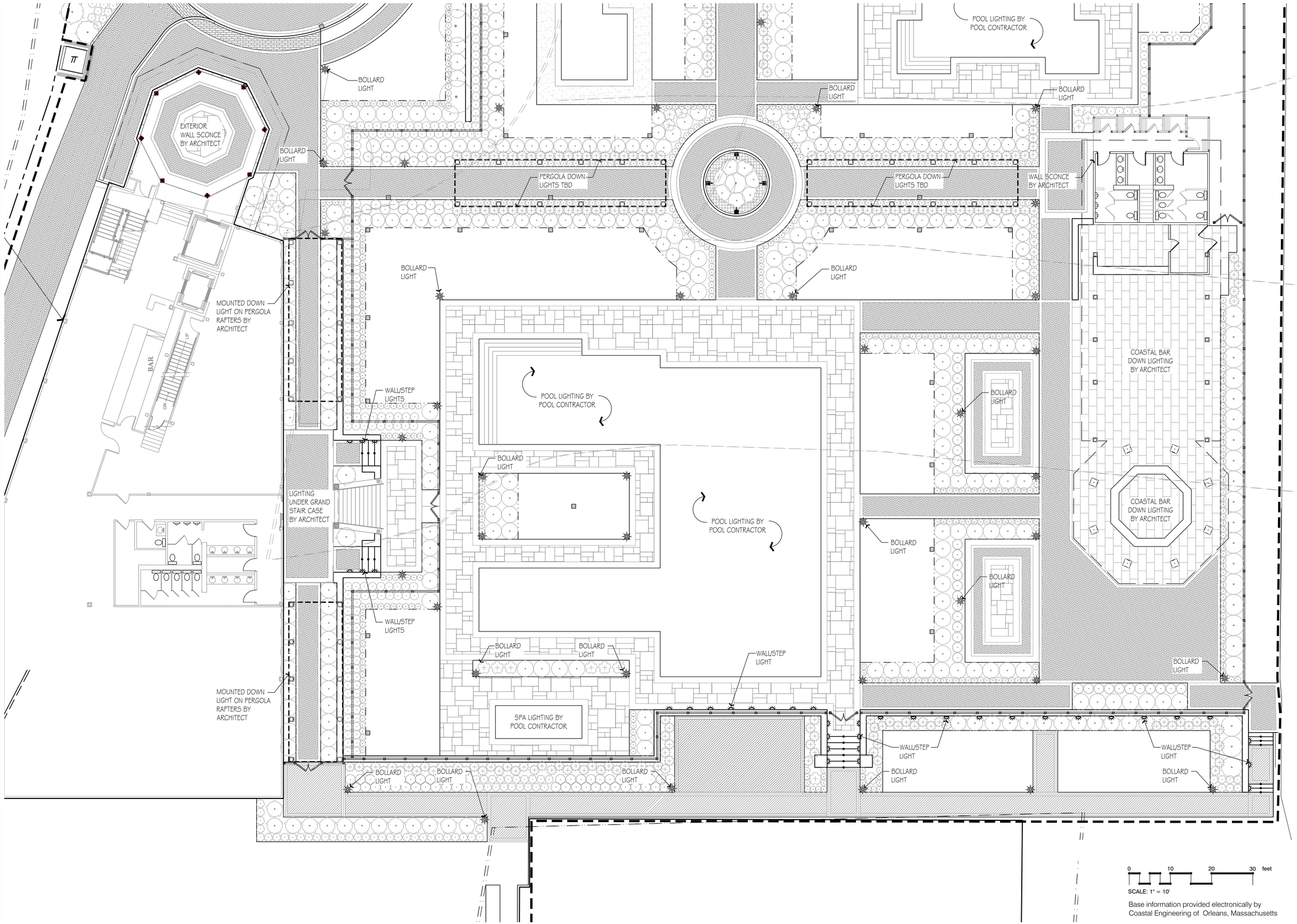


0 10 20 30 feet

SCALE: 1" = 10'

Base information provided electronically by Coastal Engineering of Orleans, Massachusetts


**Hawk Design, Inc.**
Landscape Architecture
Land Planning
Sagamore, MA
508-833-8800
info@hawkdesigninc.com
www.hawkdesigninc.com



HAWK DESIGN, INC. 2019

THIS DRAWING AND ALL INFORMATION CONTAINED HEREON IS PROPRIETARY INFORMATION OF HAWK DESIGN, INC. AND MAY NOT BE COPIED OR REPRODUCED, EITHER IN WHOLE OR IN PART, BY ANY METHOD, WITHOUT WRITTEN PERMISSION OF HAWK DESIGN, INC.


**Date:** 08/28/20

**Revisions:**

| Num. | Date | Description |
|---|---|---|
| 1. | 11/30/20 | |

MASSACHUSETTS THOMAS E. HAWK REGISTERED LANDSCAPE ARCHITECT NO. 918

11/30/20

# Wychmere Beach Club

22 Snow Inn Rd, Harwich Port, MA

Wychmere Harbor Real Estate LLC

Drawn By: TM | Checked By: DH

## Lighting Enlargement Plan

**Scale:** 1" = 10'-0"

**Sheet:** L3.2

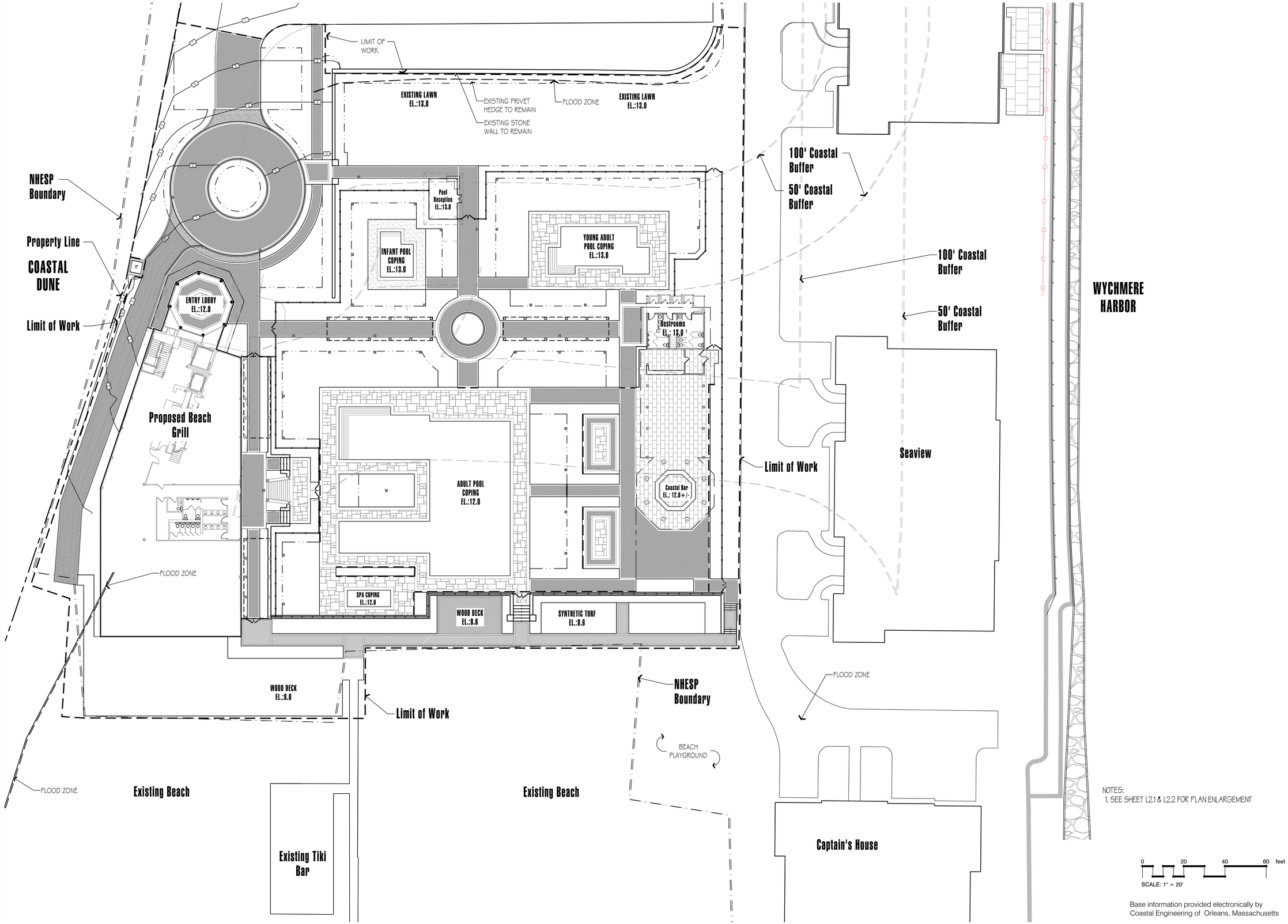


NOTES:
1. SEE SHEET L2.1 & L2.2 FOR PLAN ENLARGEMENT

Base information provided electronically by Coastal Engineering of Orleans, Massachusetts


**Hawk Design, Inc.**
Landscape Architecture
Land Planning
Sagamore, MA
508-833-8800
info@hawkdesigninc.com
www.hawkdesigninc.com



HAWK DESIGN, INC. 2019

THIS DRAWING AND ALL INFORMATION CONTAINED HEREON IS PROPRIETARY INFORMATION OF HAWK DESIGN, INC. AND MAY NOT BE COPIED OR REPRODUCED, EITHER IN WHOLE OR IN PART, BY ANY METHOD, WITHOUT WRITTEN PERMISSION OF HAWK DESIGN, INC.


Date: 08/28/20

**Revisions:**

| Num. | Date | Description |
|---|---|---|
| 1. | 11/30/20 | |

MASSACHUSETTS THOMAS E. HAWK REGISTERED LANDSCAPE ARCHITECT NO. 918
11/30/20

# Wychmere Beach Club

22 Snow Inn Rd., Harwich Port, MA
Wychmere Harbor Real Estate LLC

Drawn By: TM | Checked By: DH

## Overall Grading Plan

Scale: 1" = 20'-0"

Sheet: L4.0

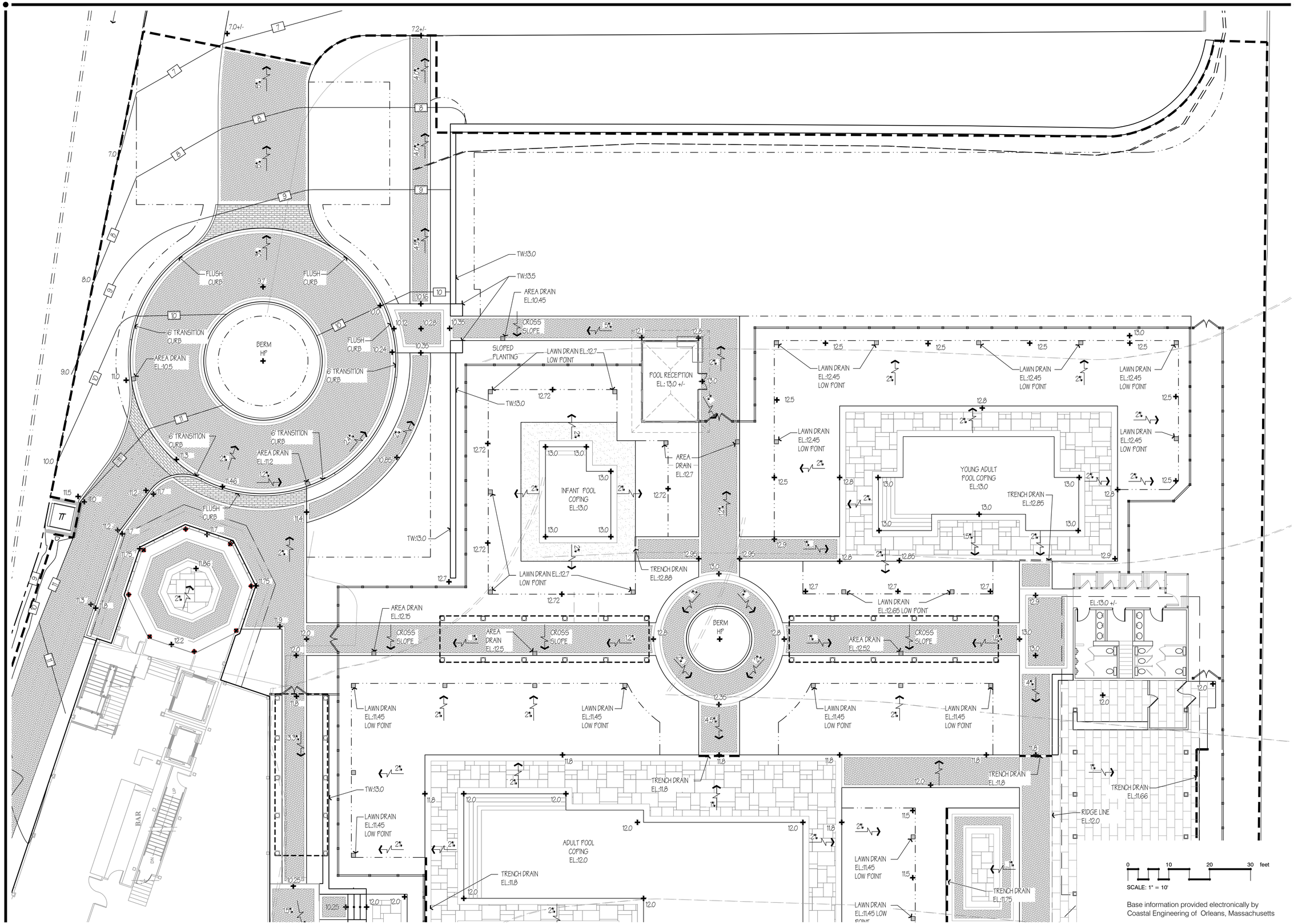


Base information provided electronically by Coastal Engineering of Orleans, Massachusetts


**Hawk Design, Inc.**
Landscape Architecture
Land Planning
Sagamore, MA
508-833-8800
info@hawkdesigninc.com
www.hawkdesigninc.com



HAWK DESIGN, INC. 2019

THIS DRAWING AND ALL INFORMATION CONTAINED HEREON IS PROPRIETARY INFORMATION OF HAWK DESIGN, INC. AND MAY NOT BE COPIED OR REPRODUCED, EITHER IN WHOLE OR IN PART, BY ANY METHOD, WITHOUT WRITTEN PERMISSION OF HAWK DESIGN, INC.


**Date: 08/28/20**

**Revisions:**

| Num. | Date | Description |
|---|---|---|
| 1. | 11/30/20 | |

MASSACHUSETTS THOMAS E. HAWK REGISTERED LANDSCAPE ARCHITECT NO. 918

11/30/20

# Wychmere Beach Club

22 Snow Inn Rd, Harwich Port, MA
Wychmere Harbor Real Estate LLC

Drawn By: TM | Checked By: DH

## Grading Enlargement Plan

Scale: 1" = 10'-0"

Sheet: **L4.1**

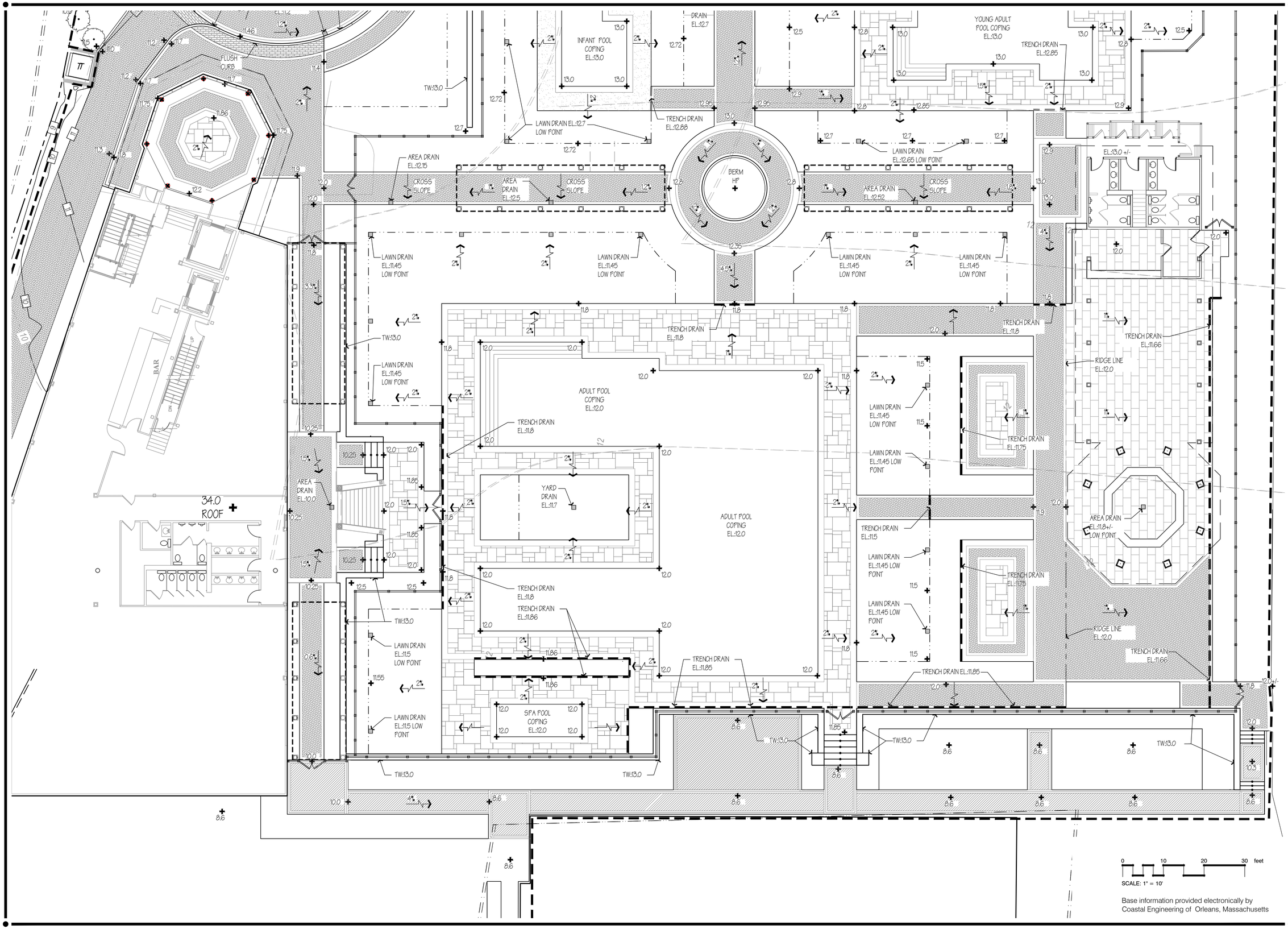


Base information provided electronically by Coastal Engineering of Orleans, Massachusetts


**Hawk Design, Inc.**
Landscape Architecture
Land Planning
Sagamore, MA
508-833-8800
info@hawkdesigninc.com
www.hawkdesigninc.com



HAWK DESIGN, INC. 2019

THIS DRAWING AND ALL INFORMATION CONTAINED HEREON IS PROPRIETARY INFORMATION OF HAWK DESIGN, INC. AND MAY NOT BE COPIED OR REPRODUCED, EITHER IN WHOLE OR IN PART, BY ANY METHOD, WITHOUT WRITTEN PERMISSION OF HAWK DESIGN, INC.


**Date: 08/28/20**

**Revisions:**

| Num. | Date | Description |
|---|---|---|
| 1. | 11/30/20 | |

MASSACHUSETTS THOMAS E. HAWK REGISTERED LANDSCAPE ARCHITECT NO. 918

11/30/20

# Wychmere Beach Club

22 Snow Inn Rd, Harwich Port, MA

Wychmere Harbor Real Estate LLC

Drawn By: TM | Checked By: DH

## Grading Enlargement Plan

Scale: 1" = 10'-0"

Sheet: **L4.2**

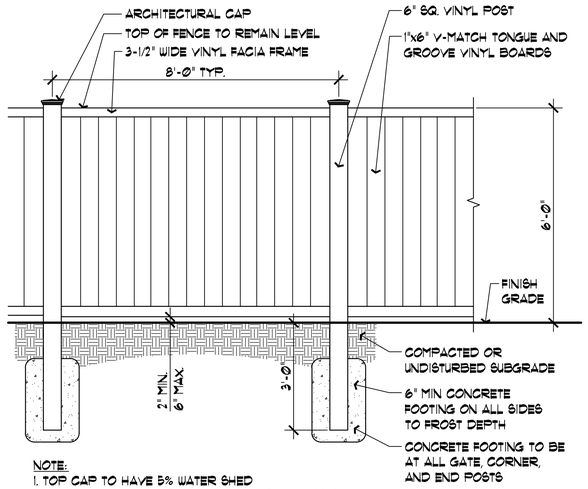


NOTE:
1. TOP CAP TO HAVE 5% WATER SHED
2. ALL SCREWS AND FASTENERS TO BE STAINLESS STEEL
3. ALL FASTENERS AND PLUGS SHOULD BE ALIGNED TO FORM A PATTERN

## Vinyl Pool Fence & Gate 6' HT.
1/2"=1'-0"

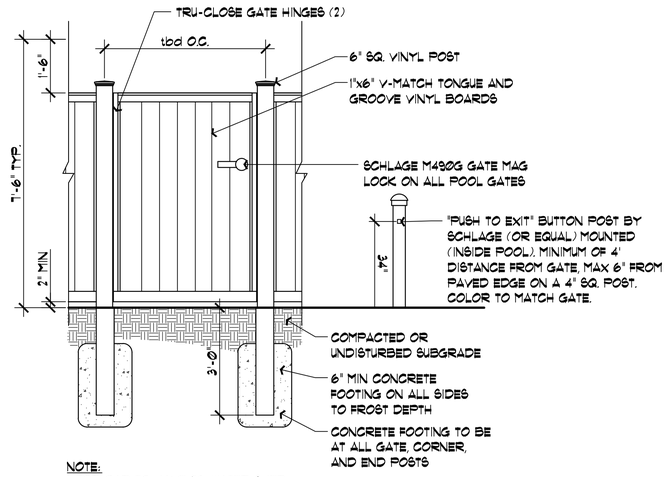


NOTE:
1. TOP CAP TO HAVE 5% WATER SHED
2. ALL SCREWS AND FASTENERS TO BE STAINLESS STEEL
3. ALL FASTENERS AND PLUGS SHOULD BE ALIGNED TO FORM A PATTERN
4. POOL GATE HEIGHT TO BE IN ACCORDANCE W/ STATE & LOCAL REGULATIONS FOR POOL FENCES
5. CONTRACTOR SHALL VERIFY & INSTALL GATE IN ACCORDANCE W/ ALL STATE & LOCAL REGULATIONS FOR POOL GATES

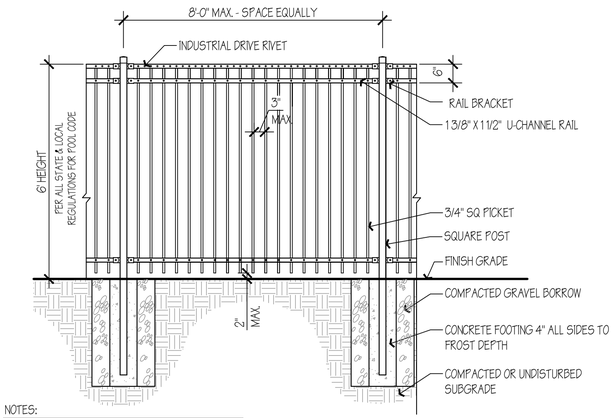


NOTES:
1. PICKETS - SPACING TO BE IN ACCORDANCE W/ STATE & LOCAL REGULATIONS
2. FENCE HEIGHT TO BE IN ACCORDANCE W/ STATE & LOCAL REGULATIONS
3. FENCE CONTRACTOR SHALL VERIFY & INSTALL FENCE IN ACCORDANCE W/ ALL STATE & LOCAL REGULATIONS
4. FOOTING WIDTH TO BE (4)X POST WIDTH
5. COLOR- BLACK

## Aluminum Pool Fence & Gate 6' HT.
1/2"=1'-0"

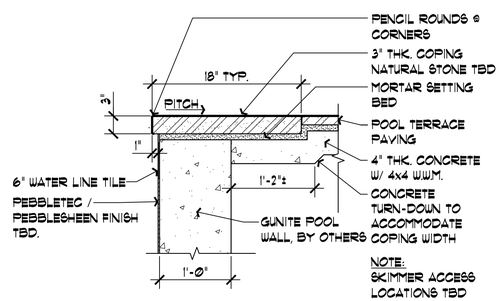


NOTE:
SKIMMER ACCESS LOCATIONS TBD

## Pool Coping
Scale: 1" = 1'-0"

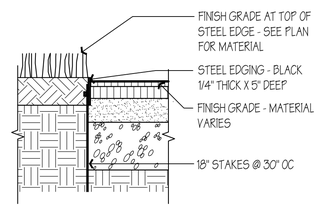


## Steel Landscape Edge
Scale: 1" = 1'-0"

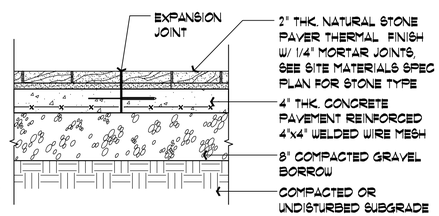


## Natural Stone Paver Wet Set TBD
Scale: 1" = 1'-0"

## Mirage Porcelain Paver Wet Set TBD
Scale: NTS

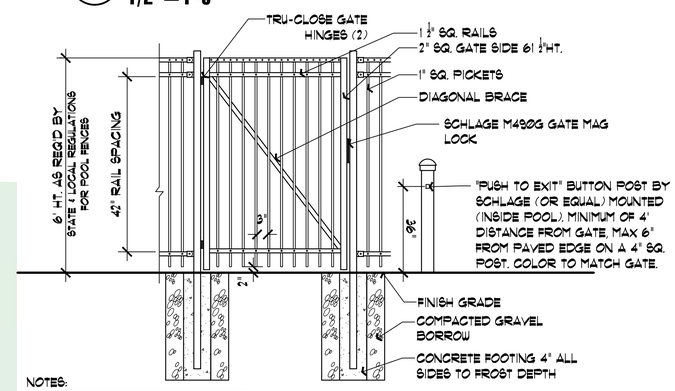


NOTES:
1. ALL WIRE FABRIC AND FENCE HARDWARE SHALL BE GALVANIZED.
2. FABRIC SHALL BE INSTALLED ON THE OUTSIDE OF POST.
3. WIRE FABRIC TO BE BLACK VINYL COATED.
4. POOL GATE HEIGHT TO BE IN ACCORDANCE W/ STATE & LOCAL REGULATIONS FOR POOL FENCES
5. CONTRACTOR SHALL VERIFY & INSTALL GATE IN ACCORDANCE W/ ALL STATE & LOCAL REGULATIONS FOR POOL GATES
6. COLOR- BLACK

## Aluminum Pool Fence & Gate 6' HT.
1/2"=1'-0"




NOTES:
1. REFER TO MANUFACTURER'S SPECIFICATIONS FOR FURTHER INFORMATION. LA TO BE NOTIFIED OF ANY DISCREPANCIES.
2. TO BE INSTALLED BY AUTHORIZED SYNLAWN INSTALLER IN ACCORDANCE WITH MANUFACTURES SPECIFICATIONS AND GUIDELINES.

## SYNLAWN Synthetic Turf
Scale: 1" = 1'-0"

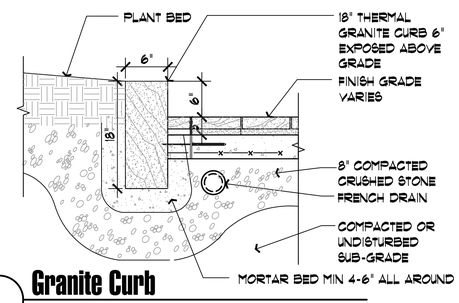


## Granite Curb
Scale: 1" = 1'-0"

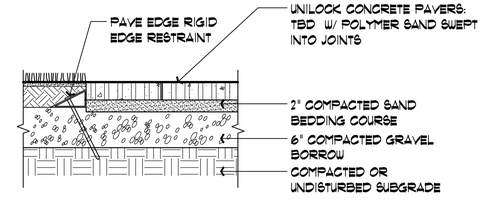


## Concrete Paver Dry Set TBD
Scale: 1" = 1'-0"

## AquaFlex Water Play Surface by PlayCore Inc
nts


**Hawk Design, Inc.**
Landscape Architecture
Land Planning
Sagamore, MA
508-833-8800
info@hawkdesigninc.com
www.hawkdesigninc.com



HAWK DESIGN, INC. 2019

THIS DRAWING AND ALL INFORMATION CONTAINED HEREON IS PROPRIETARY INFORMATION OF HAWK DESIGN, INC. AND MAY NOT BE COPIED OR REPRODUCED, EITHER IN WHOLE OR IN PART, BY ANY METHOD, WITHOUT WRITTEN PERMISSION OF HAWK DESIGN, INC.


Date: 02/11/20

Revisions:

| Num. | Date | Description |
|---|---|---|
| 1. | 08/28/20 | |
| 2. | 11/30/20 | |

MASSACHUSETTS THOMAS E. HAWK REGISTERED LANDSCAPE ARCHITECT NO. 918
11/30/20

# Wychmere Beach Club
22 Snow Inn Rd, Harwich Port, MA
Wychmere Harbor Real Estate LLC

Drawn By: TM | Checked By: DH

Construction Details

Scale: As Noted

Sheet: D1.0

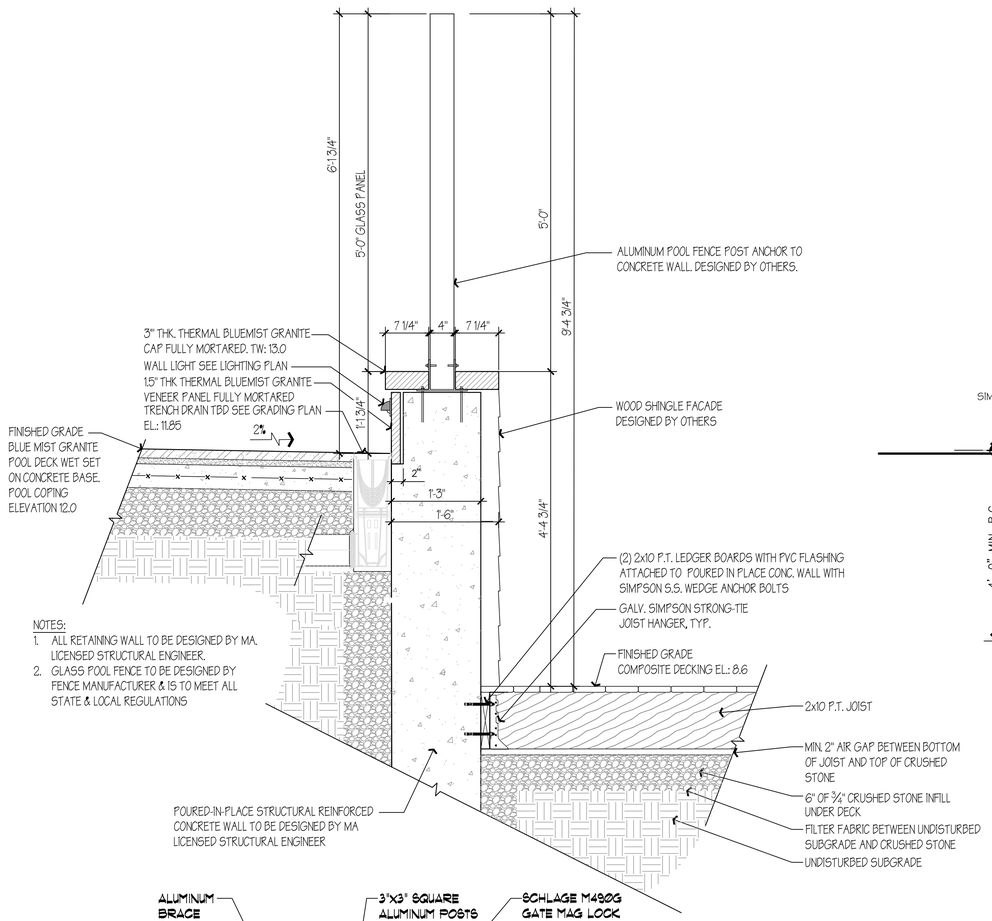


NOTES:
1. ALL RETAINING WALL TO BE DESIGNED BY MA. LICENSED STRUCTURAL ENGINEER.
2. GLASS POOL FENCE TO BE DESIGNED BY FENCE MANUFACTURER & IS TO MEET ALL STATE & LOCAL REGULATIONS

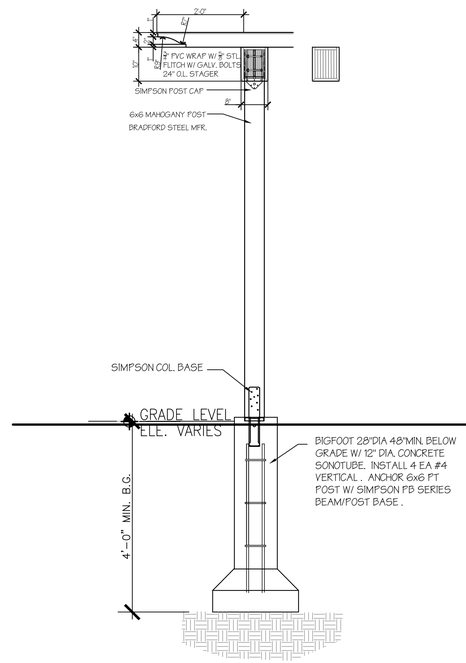


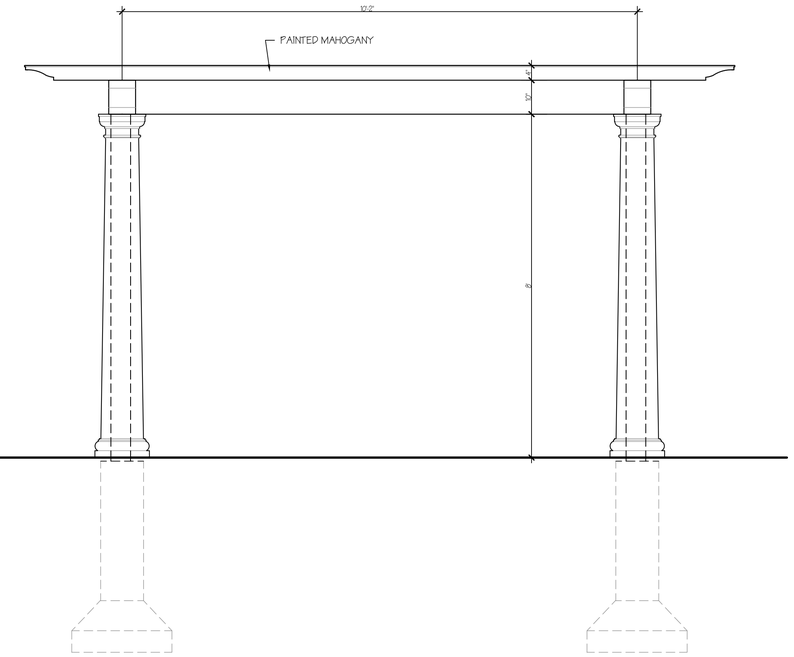


## Turncraft Pergola: Tuscan Style - To Match Building Pergola
**Scale: NTS**

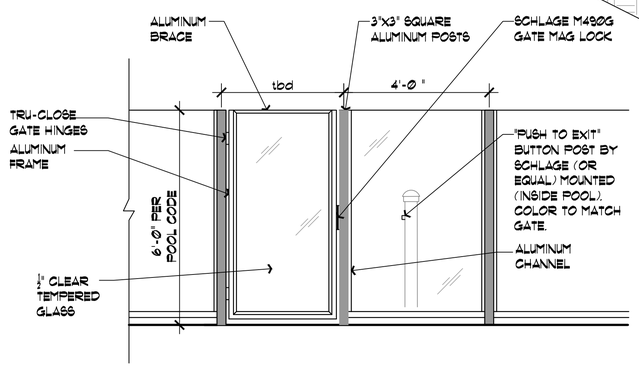


NOTES:
1. GLASS PANEL FENCING TO BE APPROVED BY THE BOARD OF HEALTH PRIOR TO INSTALLATION.
2. CONTRACTOR RESPONSIBLE TO APPLY FOR AND ATTAIN ANY NECESSARY PERMITTING FOR FENCE CONSTRUCTION.
3. ALL SPACING TO BE IN ACCORDANCE WITH STATE & LOCAL REGULATIONS FOR POOL FENCES.
4. FENCE CONTRACTOR SHALL VERIFY & INSTALL FENCE IN ACCORDANCE WITH STATE & LOCAL REGULATIONS FOR POOL FENCES.
5. CONTRACTOR SHALL SUBMIT SHOP DRAWINGS TO L.A. FOR APPROVAL PRIOR TO FABRICATION.
6. CONTRACTOR TO REPORT ANY DISCREPANCIES TO L.A. PRIOR TO FABRICATION / INSTALLATION.

## Glass Pool Fence & Gate 6' HT
**Scale: 1" = 1'-0"**

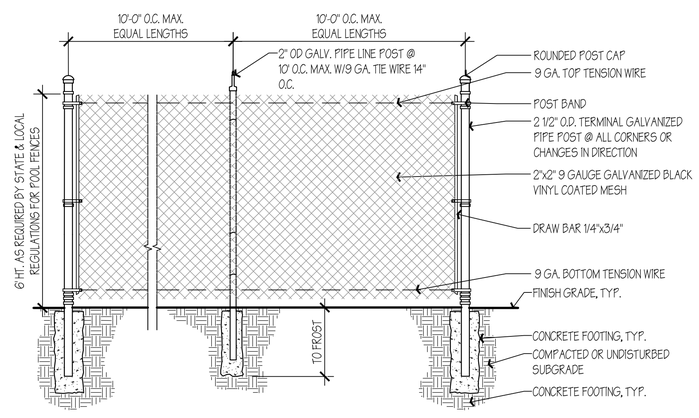


NOTES:
1. ALL WIRE FABRIC AND FENCE HARDWARE SHALL BE GALVANIZED.
2. FABRIC SHALL BE INSTALLED ON THE OUTSIDE OF POST.
3. WIRE FABRIC TO BE BLACK VINYL COATED.

## Chain Link Pool Fence 6' HT.
**Scale: 1/2" = 1'-0"**

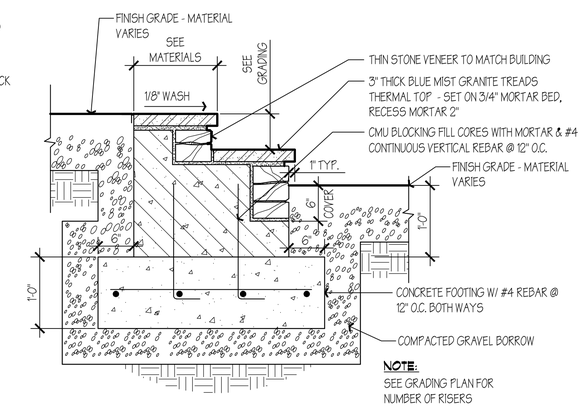


NOTE:
SEE GRADING PLAN FOR NUMBER OF RISERS

## Stone Tread & Risers CMU
**Scale: 1" = 1'-0"**


**Hawk Design, Inc.**
Landscape Architecture
Land Planning
Sagamore, MA
508-833-8800
info@hawkdesigninc.com
www.hawkdesigninc.com



HAWK DESIGN, INC. 2019

THIS DRAWING AND ALL INFORMATION CONTAINED HEREON IS PROPRIETARY INFORMATION OF HAWK DESIGN, INC. AND MAY NOT BE COPIED OR REPRODUCED, EITHER IN WHOLE OR IN PART, BY ANY METHOD, WITHOUT WRITTEN PERMISSION OF HAWK DESIGN, INC.


**Date:** 11/30/20

**Revisions:**
Num. Date Description

MASSACHUSETTS THOMAS E. HAWK REGISTERED LANDSCAPE ARCHITECT NO. 918
11/30/20

# Wychmere Beach Club
22 Snow Inn Rd, Harwich Port, MA
Longwood Venues / Atlas Development

Drawn By: TM | Checked By: DH

**Construction Details**

**Scale:** As Noted

**Sheet:** D1.1

PROGRESS LIGHTING | COMMERCIAL

Project:
Fixture Type:
Location:
Contact:

## PCPTS SERIES
LED Post Top Designer

### Specifications:

**Construction:**
Traditional style post top luminaire with decorative cast aluminum cap mechanically attached to optical chamber. Cast aluminum multi-sided cage with UV stabilized acrylic lenses sealed for weather tight operation. Aluminum lower electrical chamber with bottom fitter to mount to 3"OD x 4"H tenon.

**Optics:**
One piece optical system with internal brass standoffs soldered to the board which can be field replaced. Two-piece die cut silicone and polycarbonate foam gasket ensures weather-proof seal around each individual LED and allows luminaire to be rated for high-pressure hose down applications. The optical cartridge is secured to extruded housing with fasteners and heat pad to ensure thermal conductivity. Optics held into place without use of adhesives and complete assembly is gasketed for high pressure hose down cleaning.

**Electrical:**
Luminaire equipped with LED driver that operates with 120–277V universal voltage, 50/60Hz and includes 0-10V dimming capability. Power factor is 0.92 at full load. All electrical components rated at 50,000 hours at full load and 25oC ambient conditions. Thermal feedback between PCB and driver to protect luminaire from excessive temperature by reducing drive current as necessary. Surge protection standard with device providing surge current rating of 20KA using 8/20 pSec wave, LSP clamping voltage of 825V and surge rating of 540J.

**Finish:**
Polyester powder paint finish that is corrosion resistant and resists surface impacts up to 160 inch-pound.

**Listing/Certification:**
The luminaire bears an NRTL label and is marked suitable for wet locations.

**Warranty:**
5 year limited warranty covering LED array and LED driver(s).

**Images:**

| Wattage | Lumens |
|---|---|
| 55W | 5610 - 6170 |
| 80W | 8410 - 9250 |
| 110W | 11220 - 12340 |

**Dimensions & Mounting**

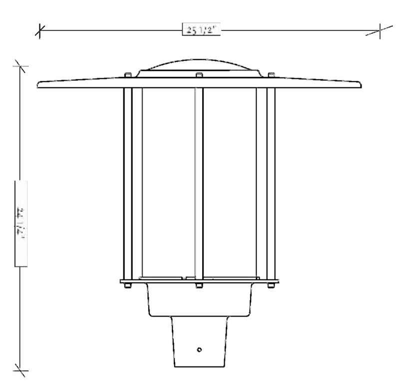


| Series | Wattage | Distribution | Finish | Options |
|---|---|---|---|---|
| PCPTS | 55 - 55W<br>80 - 80W<br>110 - 110W | 3 - Type 3<br>4 - Type 4<br>4B - Type 4, Backlight Control<br>5 - Type 5 Square<br>5R - Type 5 Round | BZ - Bronze<br>BL - Black<br>GN - Green | Blank<br>P - Photocell |

For more information visit our website: www.progresscommercial.com
Progress Lighting • 701 Millennium Boulevard • Greenville, SC 29607

# Site Light on 12' HT. Pole
**Scale: nts**

PROGRESS LIGHTING | COMMERCIAL

Project:
Fixture Type:
Location:
Contact:

## PCAD SERIES
LED Area Designer Lighting

### Specifications:

**Construction:**
The decorative pendant mount luminaire is pendant mounted in place with stainless steel bolts. The driver is located in the cast aluminum top housing and is accessible without tools by hinging the lower shade assembly. The lower shade assembly is a one-piece aluminum spinning.

**Optics:**
One piece optical system with internal brass standoffs soldered to the board which can be field replaced. Two-piece die cut silicone and polycarbonate foam gasket ensures weather-proof seal around each individual LED and allows luminaire to be rated for high-pressure hose down applications. The optical cartridge is secured to the aluminum heat sink with fasteners to ensure thermal conductivity. Optics held into place without use of adhesives and complete assembly is gasketed for high pressure hose down cleaning.

**Electrical:**
Luminaire equipped with LED driver that operates with 120-277V universal voltage, 50/60Hz and includes 0-10V dimming capability. Power factor is 0.92 at full load. All electrical components rated at 50,000 hours at full load and 40°C ambient conditions. Thermal feedback between PCB and driver to protect luminaire from excessive temperature by reducing drive current as necessary. Surge protection standard with device providing surge current rating of 20KA using 8/20 pSec wave, LSP clamping voltage of 825V and surge rating of 540J.

**Finish:**
Polyester powder paint finish that is corrosion resistant and resists surface impacts up to 160 inch-pound.

**Listing/Certification:**
The luminaire bears a CSA label and is marked suitable for wet locations.

**Warranty:**
5 year limited warranty covering LED array and LED driver(s).

**Images:**

*Arm sold separately

**Dimensions & Mounting**
*Cast Rings Optional

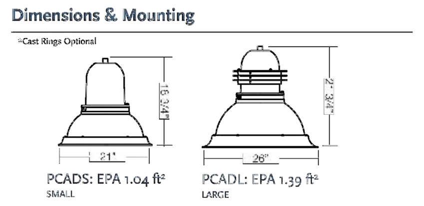


**0% UPLIGHT • DARK SKY COMPLIANT

| Engine/ Wattage | # of LEDS | Delivered Lumens (varies by optics) | Delivered LPW | Drive Current (milliamps) |
|---|---|---|---|---|
| 27 | 24 | 3600-3900 | 131-139 | 350 mA |
| 55 | 24 | 6100-6250 | 107-113 | 700 mA |
| 85 | 36 | 9100-9700 | 108-114 | 700 mA |
| 110 | 48 | 12400-1800 | 110-116 | 700 mA |
| 136 | 60 | 15200-16200 | 111-117 | 700 mA |

**Catalog number:**

| Series | Engine/Wattage | Color Temp | Distribution | Finish | Options |
|---|---|---|---|---|---|
| PCADS - Designer Small<br>PCADL - Designer Large | 27LED - 24LEDS @ 27W<br>55LED - 24LEDS @ 55W<br>85LED - 36LEDS @ 85W<br>110LED - 48LEDS @ 110W**<br>136LED - 60LEDS @ 136W** | 3K - 3000K, 70 CRI<br>4K - 4000K, 70 CRI | 2 -Type 2<br>3 - Type 3<br>4 - Type 4<br>4W - Type 4 Wide<br>5R - Type 5 Rectangle<br>5W - Type 5 Round | BZ - Bronze<br>BL - Black<br>GN - Green | BLANK<br>PC120 - 120V Photocell<br>PC277 - 277V Photocell<br>CR - Cast Rings<br>BC - Backlight Control |

** Large Only

For more information visit our website: www.progresslighting.com
Progress Lighting • 701 Millennium Boulevard • Greenville, SC 29607
REV 07/19

# Alternate Site Light on 12' HT. Pole
**Scale: nts**

## KicK™ – KB6 Bollard
TYPE

**FEATURES**

- Sensor and wireless operation
- Field rotatable optics and housing
- Customizable side panels
- 120-277, 347 and 480VAC input
- IDA Dark Sky Approved with clear lenses and 3000K
- True IES distributions
- 3000K, 4000K, 5000K CCT
- Uniformly diffused lens
- 20kV/10kA surge protection
- Integral thermal protection
- IP66

3000K and warmer CCTs only

**DIMENSIONS**

| MODEL | KB6 |
|---|---|
| OVERALL HEIGHT | 42" / 1067mm |
| OVERALL LENGTH | 6" / 152mm |
| OVERALL WIDTH | 6" / 152mm |
| WINDOW HEIGHT | 19.9" / 51cm |
| WINDOW WIDTH | 4" / 10cm |
| WEIGHT | 30 lbs / 13.6kg |

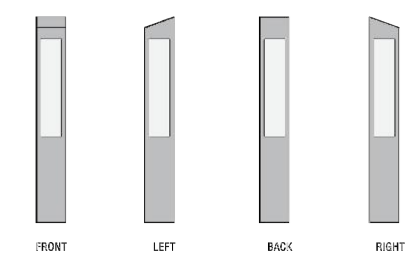


* Housing and optical distribution are independently field rotate-able in 90° increments. Default factory orientations shown above.

| DISTRIBUTION OUTPUT* | Street Side | | House Side | |
|---|---|---|---|---|
| SHIELDING SIDE | A | B | C | D |

**ORDERING INFORMATION**

| 1 | 2 | 3 | 4 | 5 | 6 | 7 |
|---|---|---|---|---|---|---|
| KB6 | Y5 | No Shield | 3000k | TBD | TBD | TBD |
| Model | Distribution | Shielding | Light Engine | Controls | Voltage | Fixture Finish |

**1. MODEL**
KB6 — 6" Square x 42 OAH bollard

**2. DISTRIBUTION**
Y2 — IES Type II, clear lens
Y3 — IES Type III, clear lens
Y4 — IES Type IV, clear lens
Y5 — IES Type V, clear lens
YD — Symmetric distribution, diffused lens

**3. SHIELDING**
Optional, may choose from 1 to 3 sides closed from options A, B, C, D or you may choose HSS option.
A — Short side closed
B — Side 90° counterclockwise from short side closed
C — Side 180° counterclockwise from short side closed
D — Side 270° counterclockwise from short side closed
HSS — House side shield²

**4. LIGHT ENGINE**
2050 — 5000K CCT, 29 watts
2040 — 4000K CCT, 29 watts
2030 — 3000K CCT, 29 watts
1050 — 5000K CCT, 14 watts
1040 — 4000K CCT, 14 watts
1030 — 3000K CCT, 14 watts
560nm monochromatic amber and or custom lumen package available by request. ¹

**5. CONTROL**
May choose one
SC-MW — Motion Sensor
WIR — wiScape Connectivity
BPC — Button Type Photocell

**6. VOLTAGE**
120-277VAC input or may choose one.
347 — 347VAC input
480 — 480VAC input

**7. FIXTURE FINISH**
Standard Color
AGN — Antique Green
BL — Black
BLT — Matte Black
CRT — Corten
DB — Dark Bronze
DGN — Dark Green
GT — Graphite
LG — Light Grey
MAL — Matte Aluminum
MDB — Bronze Metallic
MG — Medium Grey
TT — Titanium
WH — Arctic White
WDB — Weathered Bronze
VBU — Verde Blue

Premium Color
SHK — Shamrock
SPP — Salt and Pepper
SFM — Seafoam
WCP — Weathered Copper
RAL — RAL 4 digit Color
CUSTOM — Custom Color

¹ Contact factory
² House side shield assembles to optical lens and is independent of outer housing.

architectural arealighting
ARCHITECTURAL AREA LIGHTING
17760 Rowland Street | City of Industry | CA 91748
P 626.968.5666 | F 626.369.2695 | www.aal.net
Copyright © 2016 November 1, 2017 11:21 AM

JOB
TYPE
NOTES

| 1 |

# Bollard Light
**Scale: nts**

PROGRESS LIGHTING | COMMERCIAL

Project:
Fixture Type:
Location:
Contact:

## PCBO SERIES
Walkway Lighting

### Specifications:

**Construction:**
- Extruded aluminum square or round housing, with tamper resistant hardware; Flat top, for round. Single screw access for top relamping.
- Sealed one-piece, clear acrylic lens; Specular anodized aluminum optical systems; dual reflector or tube optics
- Concealed, galvanized steel anchor base; Four ½" x 10" anchor bolts
- Durable Lektrocote@ TGIC thermoset polyester powder coat paint finish assures long life and maintenance-free service

**Electrical:**
- Universal voltage (120-277V) drivers with +/- 10% tolerance, starting temperature rated at -20°C
- Rotatable LED assembly adjustment for ideal placement and aiming of symmetric light pattern
- 24 high brightness LEDs at 500 mA deliver symmetric distribution at 46 Watts
- 12 high brightness LEDs at 700 mA deliver asymmetric distribution at 31 Watts

**Warranty:**
5 year limited warranty for LED system.

**Listing/Certification:**
The luminaire is listed to UL 1598 for use in wet locations.

**Catalog number:**

| Series | Distribution | Finish |
|---|---|---|
| PCBOR - Bollard Round<br>PCBOS - Bollard Square | ASY - 12 LEDS@ 31W<br>SYM - 24LEDS@ 46W | BZ - Bronze<br>BL - Black |

**Images:**

**Dimensions & Mounting**

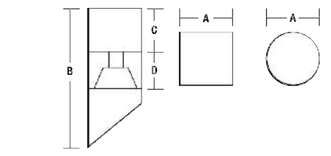

| | A | B | C | D | Weight |
|---|---|---|---|---|---|
| Square | 6.75" sq. | 42.0" | 6.0" | 4.0" | 41 lbs |
| | 171 mm | 1067 mm | 152 mm | 102 mm | 19 kg |
| Round | 7.0" dia | 42.0" | 6.0" | 4.0" | 41 lbs |
| | 178 mm | 1067 mm | 152 mm | 102 mm | 19 kg |

**Photometry:**

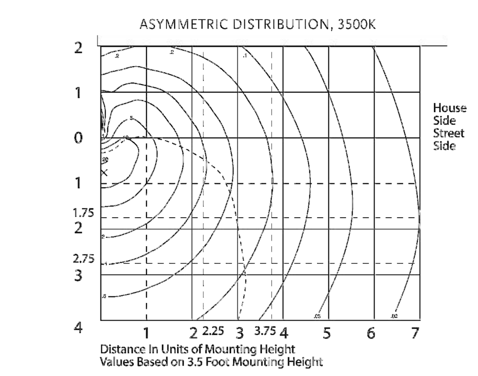


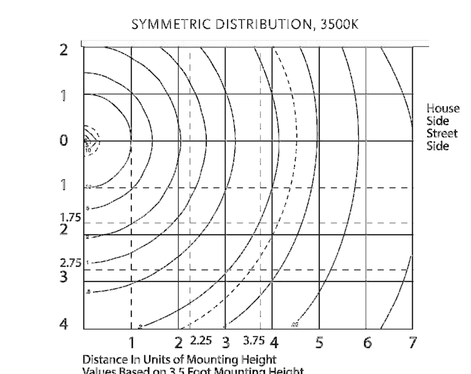


For more information visit our website: www.progresscommercial.com
Progress Lighting • 701 Millennium Boulevard • Greenville, SC 29607

# Alternate Bollard Light
**Scale: nts**

FXLuminaire.
LED Wall Lights

PROJECT
CATALOG #
TYPE
NOTES

## UN Wall Light
DESIGNER PREMIUM

Subtle, curved design elements adds style to this recessed wall light. 1 LED. Available in brass.

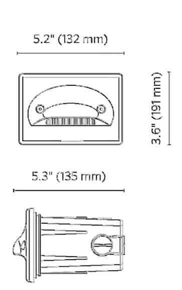


**Quick Facts**
- Die-cast brass construction
- Natural, powder coated, or antiqued brass finish
- Cree® integrated LEDs
- Tamper-resistant features
- Color temperature filters
- Compatible with Luxor® technology
- Phase and PWM dimmable
- Input voltage: 10-15V

LANDSCAPE LIGHTING

## UN Wall Light ORDERING INFORMATION

| Fixture | Luxor Option | Output | Finish |
|---|---|---|---|
| UN* | [default] Zone | 1LED 11 Lumens | BS Natural Brass |
| | ZD Zone/Dim | | BZ Bronze Metallic |
| | | | DG Desert Granite |
| | | | WI Weathered Iron |
| | | | SB Sedona Brown |
| | | | FB Black |
| | | | WG White Gloss |
| | | | FW Flat White |
| | | | AL Almond |
| | | | SV Silver |
| | | | NP Nickel Plate |
| | | | AB Antique Bronze |
| | | | AT Antique Tumbled |

EXAMPLE FIXTURE CONFIGURATION: UN-ZD-1LED-FB
*includes Sleeve With Cover (250022040000)

UN - [ ] - 1LED - [ ]

MOUNTING OPTIONS: Specify Separately

| Accessories | Code |
|---|---|
| WALL LIGHT CONNECTION KIT | EKITWALL |

LANDSCAPE LIGHTING

# Wall / Step Light
**Scale: nts**

FXLuminaire.

PROJECT
CATALOG #
TYPE
NOTES

## PF Path Light
DESIGNER PREMIUM

Sleek hat area light in 1 LED. Copper and brass construction.

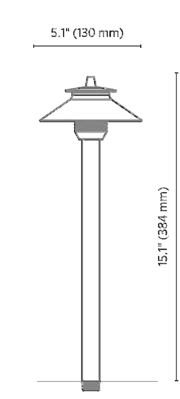


**Quick Facts**
- Copper/brass construction
- Natural, powder coated, or antiqued copper/brass
- Cree® integrated LEDs
- Tamper-resistant features
- Color temperature filters
- Compatible with Luxor® technology
- Phase and PWM dimmable
- Input voltage: 10-15V

LANDSCAPE LIGHTING

# Path Light
**Scale: nts**

## PF Path Light ORDERING INFORMATION

| Fixture | Luxor Option | Output | Riser | Finish | |
|---|---|---|---|---|---|
| PF* | [default] Zone | 1LED 33 Lumens | 8RA 8" (203 mm) Riser | CU Natural Copper | FW Flat White |
| | ZD Zone/Dim | | 12RA 12" (305 mm) Riser | BZ Bronze Metallic | AL Almond |
| | | | 18RA 18" (457 mm) Riser | DG Desert Granite | SV Silver |
| | | | 24RA* 24" (610 mm) Riser | WI Weathered Iron | AB Antique Bronze |
| | | | 36RA* 36" (914 mm) Riser | FB Black | AT Antique Tumbled |
| | | | | WG White Gloss | NP Nickel Plate |

EXAMPLE FIXTURE CONFIGURATION: PF-ZD-1LED-12R-CU
* Ships with Super Slot Spike (753900)

PF - [ ] - 1LED - [ ] - [ ]

MOUNTING OPTIONS: Specify Separately

| Mounts | Code |
|---|---|
| SUPER J-BOX 2.5" (64 mm) x 12" (305 mm) | SJ-XX* |
| POST MOUNT 2.5" (64 mm) x 13" (33 mm) | PM-XX* |
| GROUND MOUNT 2.7" (67 mm) Diameter | GM-XX* |
| VERSABOX® 2.2" (57 mm) x 1.5" (39 mm) | VB-050-XX* |
| PROAIM RATCHETING SPIKE 4.0" (102 mm) x 4.0" (102 mm) | PARS |
| 3-PRONG SPIKE 5.1" (129 mm) x 9" (229 mm) | 2500200-20000 |

*YY = riser height in inches (6" increments between 6" and 36"; 150 mm increments between 150 mm and 900 mm), XX = finish code

LANDSCAPE LIGHTING

**Hawk Design, Inc.**
Landscape Architecture
Land Planning
Sagamore, MA
508-833-8800
info@hawkdesigninc.com
www.hawkdesigninc.com

HAWK DESIGN, INC. 2019

THIS DRAWING AND ALL INFORMATION CONTAINED HEREON IS PROPRIETARY INFORMATION OF HAWK DESIGN, INC. AND MAY NOT BE COPIED OR REPRODUCED, EITHER IN WHOLE OR IN PART, BY ANY METHOD, WITHOUT WRITTEN PERMISSION OF HAWK DESIGN, INC.

**Date: 02/11/20**

**Revisions:**

| Num. | Date | Description |
|---|---|---|
| 1. | 08/28/20 | |
| 2. | 11/30/20 | |

COMMONWEALTH OF MASSACHUSETTS — THOMAS E. MINER — NO. 918 — REGISTERED LANDSCAPE ARCHITECT
11/30/20

**Wychmere Beach Club**
22 Snow Inn Rd, Harwich Port, MA
Wychmere Harbor Real Estate LLC

Drawn By: TM | Checked By: DH

**Site Lighting Specifications**

**Scale: nts**

**Sheet: D2.0**

**TOWN PLANNER** • 732 Main Street, Harwich, MA 02645

*508-430-7511 fax: 508-430-4703*

**AGENDA ITEM # III.A**

To: Planning Board
From: Charleen Greenhalgh, Town Planner
Date: January 19, 2021
Re: Staff Report #2– Site Plan Review & Use Special Permits

**PB2020-34 Cool Change LLC, Allen Harbor Marine,** applicant & owner, c/o Rob O'Neill, representative, seeks a Site Plan Review and Use Special Permit pursuant to §§325-55; 325-13, Use Table, paragraph IV.19; and 325-51 to construct a 4,102 square foot commercial building for a marine use (boat maintenance and repair) and associated parking for property located at 282 Route 28, Map 12, Parcel G2-1 in the CH-1 zoning district.

The Planning Board opened the public hearing on this matter on Tuesday, January 26, 2021. The hearing was then continued to February 9, 2021.

**Description**

The applicant seeks approval for a Site Plan Review Special Permit and a Use Special Permit for a marine use. The property is currently undeveloped; however the restaurant use to the west has a parking easement on this parcel. The application was filed with the Town Clerk on December 22, 2020. Revised plans were submitted on January 13, 2021 and February 1, 2021 and include the following:

1. Form A – Special Permits & Site Plan Review
2. Site Plan Review Narrative, dated December 18, 2020 by Stephen S. Morrell, AIA
3. Municipal Lien Certificate
4. AMENDED project narrative dated October 22, 2020 by Benjamin E. Zehnder
5. Packet of previous Board of Appeals decision and other correspondence
6. Set of Plans for Allen Harbor Marine Bldg Project, prepared by GenCon and Green Seal Environmental, Inc., Stuart D. Clark, P.E. dated December 17, 2020, with a latest revision date of 1/8/21 (unless otherwise noted):
   a) Sheet G-00, General Notes, Not To Scale (NTS)
   b) Sheet C-00, Existing Conditions, scale 1" = 20'
   c) Sheet C-01, Site Plan, scale 1" = 20', revised 1/27/21
   d) Sheet C-02, Utilities Plan, scale 1" = 20'
   e) Sheet C-03, On-Site Sanitary Disposal System, scale As Noted
   f) Sheet C-04, Erosions Control Plan, scale 1" = 20'
   g) Sheet C-05, Watershed Areas, scale 1" = 30'
   h) Sheet C-06, Traffic Circulation C-06 Plan, scale 1" = 20'
   i) Sheet C-07, Landscape Plan C-07, scale 1" = 20', revised 1/27/21
   j) Sheet D-00, Details, scale An Noted

7. Set of Building Plans for Allen Harbor Marine Bldg Project, prepared by GenCon:
   a) Sheet A1.1, Floor Plan, Sections & Elevations, scale As Noted, dated 1/27/21.
   b) Renderings (showing three garage doors)
8. Response Letter, by Rob O'Neill, Project Manager (GenServ)
9. Site Plan Review Application Narrative, dated November 6, 2020 by Stephen S. Morrell, AIA
10. Waiver Request, by Rob O'Neill, Project Manager (GenServ)
11. Exterior Light Fixtures, by Rob O'Neill, Project Manager (GenServ) nine (9) cut sheets are included.

Please note that only the recently submitted plans will be contained in the Board's paper packets and consist of: A1.1, C-01, C-07 and Renderings as the Board members received all the plans in the packet for January 26th. The online packet will have all the plans and other information.

**MGL Reference and Planning Board Jurisdiction**

Pursuant to MGL c.40 A, §9 the Planning Board must, within 65 days of submission of application for a special permit hold a public hearing. The decision of the Planning Board shall take place within 90 days following the close of the public hearing. Further, a special permit issued shall require a two-thirds vote of the Board.

The Planning Board has jurisdiction to review this application pursuant to the §325-13 and §325-51 for the Use Special Permit and §325-55 for the Site Plan Review Special Permit.

**Waivers**

The applicant had requested waivers for landscaping and plantings and curbing and wheel stops. These waivers are no long required (See staff comments and finding below).

**Comments from other Boards, Departments, Committees**

**Health:** A fully compliant septic system must be approved prior to any building permit issuance.
**Fire, Police, Water, DPW/Highway:** No issues, comments or concerns.
**Conservation:** Any work in the FEMA Flood Zone requires Conservation Commission approval, as this is Land Subject to Coastal Storm Flowage.
**Engineering:** The Town Engineer reviewed the plans with the Town Planner; comments are noted below. Additionally, he will be reviewing in detail the Stormwater Report and provide comments as needed.

**Planning Staff Comments**

1. At the last meeting with the Planning Board the Board request additional information including: landscaping, updated renderings, and updated site plan showing wheelstops along the easterly parking, the use of the two parking spaces on the westerly side, closest to the building, to be used only during the restaurant use hours and the parking space dimensions. All these have been submitted as requested.
2. We still encourage one central curb cut. Because this is a change of use this would need to go to MassDOT for a curb cut permit. This can be made a condition of approval.
3. The Zoning Board of Appeals approved variances for setbacks for the building and parking pursuant to Case #2020-41.

4. The property contains a use easement for parking for the restaurant located to the west of the property (Villa Roma). The parking needs for each use will be offset by the nature of each business and the hours of operation.
5. At this time it appear that all requirements of the zoning bylaws have been met.
6. Reasonable conditions are recommended including:
   a. A fully compliant septic system must be approved prior to any building permit issuance.
   b. Any work in the FEMA Flood Zone requires Conservation Commission approval, as this is Land Subject to Coastal Storm Flowage.
   c. A Massachusetts Department of Transportation ("MassDOT") may be required as this is a change of use. Any changes to the entrance to the site as a result of this review shall not require further review from the Planning Board. A copy of the MassDOT curb cut permit shall be filed with the Planning Office.
   d. All signage shall comply with the Sign Code and Building Department Requirements.
   e. All lighting shall comply with the Lighting Code.
   f. No outside storage of boats or other materials shall be permitted.
   g. Any changes to the approved site may require additional review and approvals from the Planning Board.
   h. This decision shall be recorded at the Barnstable County Registry of Deeds.
   i. Conformance with all review procedure requirements outlined pursuant to the Code of the Town of Harwich §400-18.G Inspection, certificate of completion and as-built plan shall be met.

## VOTES

**Continuance**

If the Board will require additional information or wants to take the matter under advisement the following motion is recommended:

> Move to continue the hearing for **PB2020-34 Cool Change LLC,** to no earlier than 6:30 pm on _____ (Next Meeting Dates: *Feb. 23, Mar. 9, Mar. 23)* for the following reason(s): *Need to provide reasons for the continuance…additional information…taking it under consideration….*

## I. Vote to Close the Public Hearing

## II. Vote to Adopt Proposed Findings:

To adopt the following finding of fact (***the Board may wish to add or change findings***):

1. The property is located with the CH-1 zoning district.
2. Subject property is burden by a parking easement by the adjacent parcel to the west.
3. The Marine Use is allowable with a Use Special Permit.
4. Dimensional variances for the building and parking setbacks were approved by the Harwich Zoning Board of Appeals pursuant to Case #2020-41.
5. Appropriate and adequate landscaping has been provided.
6. Appropriate and adequate parking shall be provided on the subject site.
7. The use as developed will not adversely affect the neighborhood.
8. The specific site is an appropriate location for such a use.
9. There will be no nuisance or serious hazard to vehicles or pedestrians.
10. Adequate and appropriate facilities will be provided for the proper operation of the proposed use, including appropriate sewage treatment.

**<u>Vote on Use Special Permit</u> (*Please Note*:** An affirmative vote by at least five Planning Board members is required.)

1. To **approve with conditions** case PB2020-34 Cool Change LLC for a Use Special Permit pursuant to §325-13, Use Table, paragraph IV.19 and §325-51 for a Marine Use (boat maintenance and repair) for property located at 282 Route 28, Map 12, Parcel G2-1 in the CH-1 zoning district, based on the aforementioned findings of fact and the fact that the application meets the necessary requirements and criteria for approval pursuant to the Code of Town of Harwich. The following condition is imposed: ***(Note: need to determine and outline the conditions.)***
    1.) No outside storage of boats or other materials shall be permitted.

2. To **deny** case number case number PB2020-34 Cool Change LLC for a Use Special Permit pursuant to §325-13, Use Table, paragraph IV.19 and §325-51 for a Marine Use (boat maintenance and repair) for property located at 282 Route 28, Map 12, Parcel G2-1 in the CH-1 zoning district, based on the fact that the application does not meet the necessary requirements and criteria for approval pursuant to the Code of Town of Harwich, specifically…***(Note: need to list the specific requirements that have not been satisfied.)***

**<u>Vote on Site Plan Review Special Permit:</u> (*Please Note*:** An affirmative vote by at least five Planning Board members is required.)

I. To **approve with *conditions*** case number PB2020-34 Cool Change LLC for a Site Plan Review pursuant to §§325-55 to construct a 4,102 square foot commercial building for a marine use (boat maintenance and repair) and associated parking at property located at 282 Route 28, Map 12, Parcel G2-1 in the CH-1 zoning district. The decision is based on the aforementioned findings of fact, the fact that the application meets the necessary requirements and criteria for approval pursuant to the Code of Town of Harwich and the fact that the Marine Use is permitted by Special Permit in the zoning district. The following conditions are imposed:
    1. A fully compliant septic system must be approved prior to any building permit issuance.
    2. Any work in the FEMA Flood Zone requires Conservation Commission approval, as this is Land Subject to Coastal Storm Flowage.
    3. No outside storage of boats or other materials shall be permitted.
    4. A Massachusetts Department of Transportation ("MassDOT") may be required as this is a change of use. Any changes to the entrance to the site as a result of this review shall not require further review from the Planning Board. A copy of the MassDOT curb cut permit shall be filed with the Planning Office.
    5. All signage shall comply with the Sign Code and Building Department Requirements.
    6. All lighting shall comply with the Lighting Code.
    7. Any changes to the approved site may require additional review and approvals from the Planning Board.
    8. This decision shall be recorded at the Barnstable Registry of Deeds.
    9. Conformance with all review procedure requirements outlined pursuant to §400-18.G Inspection, certificate of completion and as-built plan, of the Code of the Town of Harwich shall be met.

II. To ***deny*** case number PB2020-34 Cool Change LLC for a Site Plan Review Special Permit pursuant to §§325-55 to construct a 4,102 square foot commercial building for a marine use (boat maintenance and repair) and associated parking at property located at 282 Route 28, Map 12, Parcel G2-1 in the CH-1 zoning district, based on the fact that the Use Special Permit was denied and therefore the Site Plan Review Special Permit cannot be granted.

GENCON

**November 6, 2020**

Harwich Planning Department
732 Main Street
Harwich, MA 02645

Re: **Site Plan Review Application Narrative**
*Proposed Boat Maintenance and Repair Building*
*282 MA Route 28*
*Harwich, MA*

The proposed use for the lot is for boat maintenance and repair. The owner is proposing a structure to house these activities in lieu of having the boats and accompanying work out in the open. It is believed this structure would benefit the abutters both aesthetically and via a major reduction of the noise associated with the work on the boats. There is a parking easement that has been granted to the adjacent restaurant which restricts the buildable area of the lot. This easement grants access to the 14 spaces in front of the building. As the operating hours of the two business do not overlap, these spaces will be used by the restaurant during their business hours and by the owner at all other times.

The proposed building will 60'x78'. It will be 25' above average grade at its highest point.
Site work will include but not be limited to minor grading, 3 new parking spaces, a new septic system, a tight tank, and a rain garden.

Very truly yours,

Stephen S. Morrell, AIA
Lead Architect

**323 Manley Street • West Bridgewater, MA 02379 • info@GenConDB.com • 508.580.4266**

GenServ
Interiors | Special Projects

Harwich Planning Department
Ms. Charleen Greenlagh
732 Main Street Harwich, MA
Attn: Ms. Greenlagh

RE: PB-2002-34 Waiver Request

Ms. Greenlagh,

Please see the below waivers requested for the Allen Harbor Marine project at 282 Rt 28.

1. We are requesting a waiver on landscaping and plantings for this project. The adjacent Tyler Lane subdivision includes landscaping and plantings. The current site for Allen Harbor and proposed building does not allow for planting/landscape areas.
2. We are requesting a waiver on curbing and wheel stops due to this will impede on the maneuverability of boats coming in and out of the site.

Thank you,

R. O'Neill

Rob O'Neill
Project Manager

323 Manley Street • West Bridgewater, MA 02739 • www.gencondb.com • (O) 508.580.4626 • (F) 508.580.4266

# GENERAL CONSTRUCTION NOTES

1. ALL SITE PREPARATION NECESSARY TO COMPLETE THIS PROJECT ARE THE SOLE RESPONSIBILITY OF THE CONTRACTOR.

2. THE CONTRACTOR SHALL COORDINATE ALL NECESSARY POLICE DETAILS WITH THE LOCAL POLICE DEPARTMENT.

3. ALL CONSTRUCTION AND CONTRACTOR VEHICLES ARE TO BE PARKED WITHIN THE SITE PROPERTY. PARKING OF ANY CONSTRUCTION VEHICLE OUTSIDE OF THE SITE LIMITS IS PROHIBITED.

4. THE CONTRACTOR SHALL MAKE ALL NECESSARY CONSTRUCTION NOTIFICATIONS AND APPLY FOR AND OBTAIN ALL REQUIRED CONSTRUCTION PERMITS. ALL FEES INCLUDING POLICE DETAILS AND POSTING OF BONDS ARE TO BE PAID BY THE CONTRACTOR, AND COORDINATED WITH THE OWNER AND THE ENGINEER.

5. ALL EXISTING CONDITIONS SHOWN SHALL BE CONSIDERED APPROXIMATE AND ARE BASED ON THE BEST INFORMATION AVAILABLE. THE CONTRACTOR SHALL BE RESPONSIBLE FOR VERIFYING THAT THE PROPOSED CONDITIONS SHOWN ON THE PLANS DO NOT CONFLICT WITH ANY KNOWN EXISTING OR OTHER PROPOSED IMPROVEMENTS. IF ANY CONFLICTS ARE DISCOVERED, THE CONTRACTOR SHALL NOTIFY THE OWNER AND THE ENGINEER PRIOR TO CONDUCTING ANY WORK.

6. THE CONTRACTOR IS SPECIFICALLY CAUTIONED THAT THE LOCATION AND/OR ELEVATION OF EXISTING UTILITIES AND STRUCTURES AS SHOWN ON THESE PLANS ARE BASED ON RECORDS OF PREVIOUS OWNERS, VARIOUS UTILITY COMPANIES, AND WHEREVER POSSIBLE, MEASUREMENTS TAKEN IN THE FIELD. THIS INFORMATION IS NOT GUARANTEED AS BEING EXACT OR COMPLETE. THE LOCATION OF ALL UNDERGROUND UTILITIES AND STRUCTURES SHALL BE VERIFIED IN THE FIELD BY THE CONTRACTOR PRIOR TO THE START OF CONSTRUCTION. THE CONTRACTOR MUST CONTACT THE APPROPRIATE UTILITY COMPANIES, ANY GOVERNING PERMITTING AUTHORITIES, AND "DIGSAFE" AT LEAST 72 HOURS PRIOR TO ANY EXCAVATION WORK IN PREVIOUSLY UNALTERED AREAS TO REQUEST EXACT FIELD LOCATION OF UTILITIES. IT SHALL BE THE RESPONSIBILITY OF THE CONTRACTOR TO RESOLVE CONFLICTS BETWEEN THE PROPOSED UTILITIES AND FIELD-LOCATED UTILITIES AND SHALL REPORT ANY DISCREPANCIES TO THE ENGINEER IMMEDIATELY. THE ENGINEER ASSUMES NO RESPONSIBILITY FOR DAMAGES INCURRED AS A RESULT OF UTILITIES OMITTED, INCOMPLETELY OR INACCURATELY SHOWN. THE CONTRACTOR SHALL BE RESPONSIBLE FOR MAINTAINING ACCURATE RECORDS OF THE LOCATION AND ELEVATION OF ALL WORK INSTALLED AND EXISTING UTILITIES FOUND DURING CONSTRUCTION FOR THE PREPARATION OF THE AS-BUILT PLAN.

7. THE CONTRACTOR IS RESPONSIBLE FOR MAINTAINING ALL EXISTING UTILITIES IN WORKING ORDER AND FREE FROM DAMAGE DURING THE ENTIRE DURATION OF THE PROJECT. ALL COSTS RELATED TO THE REPAIR OF UTILITIES SHALL BE THE RESPONSIBILITY OF THE CONTRACTOR. EXCAVATION REQUIRED WITHIN THE PROXIMITY OF EXISTING UTILITY LINES SHALL BE DONE BY HAND. CONTRACTOR SHALL REPAIR ANY DAMAGE TO EXISTING UTILITY LINES OR STRUCTURES INCURRED DURING CONSTRUCTION OPERATIONS AT NO COST TO THE OWNER.

8. THE CONTRACTOR SHALL UTILIZE ALL PRECAUTIONS AND MEASURES TO ENSURE THE SAFETY OF THE PUBLIC, ALL PERSONAL AND PROPERTY DURING CONSTRUCTION IN ACCORDANCE WITH OSHA STANDARDS, INCLUDING BARRICADES, SAFETY LIGHTING, CONES, POLICE DETAIL AND/OR FLAGMEN AS DETERMINED NECESSARY BY THE ENGINEER AND/OR OWNER. THE CONTRACTOR SHALL BE RESPONSIBLE FOR THE COST OF POLICE DETAIL AND FOR COORDINATING WITH THE LOCAL OR STATE POLICE DEPARTMENT FOR ALL REQUIRED POLICE DETAIL.

9. ALL TRENCHING WORK WITHIN A PUBLIC OR PRIVATE ROADWAY SHALL BE COORDINATED WITH THE OWNER AND/OR PROPER LOCAL & STATE AGENCIES. TRENCH SAFETY AND RELATED PERMITS SHALL BE THE RESPONSIBILITY OF THE CONTRACTOR. THIS WORK MAY BE REQUIRED TO TAKE PLACE OUTSIDE OF NORMAL HOURS OF OPERATION FOR THE FACILITY.

10. ALL TRENCH WORK WITHIN EXISTING PAVEMENT SHALL BE NEATLY SAWCUT PER THE APPLICABLE DETAILS. TRENCH BACKFILL SHALL BE PLACED AND COMPACTED IN 8-INCH LIFTS OR AS OTHERWISE INDICATED ON PLANS. CONTRACTOR SHALL BE RESPONSIBLE FOR REPAIRING ANY SETTLING DUE TO INADEQUATE COMPACTION AS DETERMINED BY THE ENGINEER WITHIN THE WARRANTY PERIOD.

11. THE CONTRACTOR SHALL MAKE ALL CONNECTION ARRANGEMENTS WITH UTILITY COMPANIES, AS NECESSARY, INCLUDING NOTIFICATIONS TO THE CITY AND UTILITIES PRIOR TO ANY WORK.

12. ALL IMPORTED MATERIAL SHALL BE CLEAN AND FREE OF ANY HAZARDOUS WASTE OR OTHER CHEMICAL CONTAMINATION. NO MATERIAL WILL BE ACCEPTED FROM AN EXISTING OR FORMER 21E SITE AS DEFINED BY THE MASSACHUSETTS CONTINGENCY PLAN 310 CMR 40.0000.

13. SITE LAYOUT SURVEY REQUIRED FOR CONSTRUCTION WILL BE PROVIDED BY THE CONTRACTOR AND SHALL BE CONDUCTED BY A MASSACHUSETTS' REGISTERED PROFESSIONAL LAND SURVEYOR. THE CONTRACTOR IS RESPONSIBLE FOR COORDINATING WITH THE SURVEYOR FOR ALL SITE SURVEY WORK. THE CONTRACTOR IS RESPONSIBLE FOR PROVIDING AN AS-BUILT PLAN OF THE SITE CONDUCTED BY A REGISTERED PROFESSIONAL LAND SURVEYOR AND APPROVED BY THE ENGINEER. AS-BUILTS ARE REQUIRED TO OBTAIN MASSDEP AUTHORIZATION TO OPERATE.

14. THE CONTRACTOR SHALL BE RESPONSIBLE FOR ESTABLISHING AND MAINTAINING ALL HORIZONTAL AND VERTICAL CONTROL POINTS DURING CONSTRUCTION INCLUDING BENCHMARK LOCATIONS AND ELEVATIONS AT CRITICAL AREAS. THE LOCATION OF ALL CONTROL POINTS AND BENCHMARKS SHALL BE COORDINATED WITH THE ENGINEER.

15. THE CONTRACTOR SHALL BE RESPONSIBLE FOR MAINTAINING ALL GRADE STAKES AND MONUMENTATION. GRADE STAKES SHALL REMAIN IN PLACE UNTIL A FINAL INSPECTION OF THE SITE HAS BEEN COMPLETED BY THE ENGINEER. ANY RE-STAKING OF PREVIOUSLY SURVEYED SITE FEATURES SHALL BE THE RESPONSIBILITY (INCLUDING COST) OF THE CONTRACTOR.

16. UNLESS OTHERWISE SPECIFIED ON THE PLANS AND DETAILS/SPECIFICATIONS, ALL SITE CONSTRUCTION MATERIALS AND METHODOLOGIES ARE TO CONFORM TO THE MOST RECENT VERSION OF THE MASSACHUSETTS DEPARTMENT OF TRANSPORTATION (MASSACHUSETTS HIGHWAY DEPARTMENT) STANDARD SPECIFICATIONS (THE MASSACHUSETTS HIGHWAY DEPARTMENT 1988 STANDARD SPECIFICATIONS FOR HIGHWAYS AND BRIDGES, THE 2002 SUPPLEMENTAL SPECIFICATIONS, AND THE 2005 STANDARD SPECIAL PROVISIONS).

17. CONSTRUCTION AND/OR DEMOLITION SHALL BE PERFORMED IN ACCORDANCE WITH APPLICABLE LAWS AND REGULATIONS REGARDING NOISE, VIBRATION, DUST, SEDIMENTATION CONTAINMENT, HAZARDOUS WASTES, AND TRENCH WORK.

18. SOLID WASTES AND/OR CONSTRUCTION OR DEMOLITION DEBRIS SHALL BE COLLECTED AND STORED IN A SECURED DUMPSTER. THE DUMPSTER SHALL MEET ALL LOCAL AND STATE SOLID WASTE MANAGEMENT REGULATIONS.

19. THE CONTRACTOR SHALL RESTORE ALL SITE SURFACES TO THEIR ORIGINAL CONDITION OR BETTER AFTER CONSTRUCTION IS COMPLETE. AREAS NOT DISTURBED BY CONSTRUCTION SHALL BE LEFT NATURAL. THE CONTRACTOR SHALL TAKE CARE TO PREVENT DAMAGE TO SHRUBS, TREES, OTHER LANDSCAPING AND/OR NATURAL FEATURES. IF THE PLANS FAIL TO IDENTIFY ALL LANDSCAPE FEATURES, EXISTING CONDITIONS MUST BE VERIFIED BY THE CONTRACTOR PRIOR TO COMMENCEMENT OF ANY WORK.

20. UNPAVED AREAS DISTURBED BY THE WORK SHALL HAVE A MINIMUM OF 4-INCHES OF LOAM (OR MORE AS SHOWN ON PLAN DETAILS) AND HYDROSEEDED AS SHOWN ON THE PLAN AND/OR DIRECTED BY THE ENGINEER. THE CONTRACTOR SHALL BE RESPONSIBLE FOR WATERING ANY LOAMED AND SEEDED AREAS UNTIL GROWTH IS ESTABLISHED AND APPROVED BY THE ENGINEER AND/OR OWNER.

21. ALL PROPOSED STRUCTURES AND COMPONENTS SHALL BE DESIGNED BY THEIR MANUFACTURERS TO WITHSTAND AASHTO H-20 LOADING. PRECAST CONCRETE SHALL HAVE A MINIMUM 28-DAY STRENGTH OF 4,000 PSI UNLESS OTHERWISE SPECIFIED BY THE ENGINEER.

22. THE CONTRACTOR SHALL PROVIDE A UNIT PRICE COST IN CUBIC YARD MEASURE FOR LEDGE AND/OR BOULDER REMOVAL. LEDGE AND/OR BOULDERS LESS THAN 1 CUBIC YARD IN SIZE BASED ON THE AVERAGE DIMENSIONS WILL NOT BE CONSIDERED PAYABLE ROCK. UNIT PRICE SHALL BE GIVEN FOR BOTH ON AND OFF SITE DISPOSAL. COST OF REPLACEMENT MATERIAL SHALL BE INCLUDED IF ADDITIONAL FILL MATERIAL IS REQUIRED.

23. DEVIATION OR ALTERATION OF THE PROPOSED WORK IS TO BE VERIFIED BY THE ENGINEER AND OWNER PRIOR TO CONDUCTING THE WORK.

24. AT THE END OF CONSTRUCTION, THE CONTRACTOR SHALL REMOVE ALL CONSTRUCTION DEBRIS AND SURPLUS MATERIALS FROM THE SITE. A THOROUGH INSPECTION OF THE WORK SITE AND PERIMETER IS TO BE MADE AND ALL DISCARDED MATERIALS AND WIND BLOWN OR WATER CARRIED DEBRIS SHALL BE COLLECTED AND REMOVED FROM THE SITE.

# GENERAL GRADING AND DRAINAGE NOTES

1. ALL CUT AND FILL SLOPES SHALL BE 3H:1V OR FLATTER UNLESS OTHERWISE NOTED ON THE PLANS.

2. CONTRACTOR SHALL ADJUST AND/OR NEATLY SAWCUT EXISTING PAVEMENT AS NECESSARY TO ENSURE A SMOOTH TRANSITION AND CONTINUOUS GRADE. A CONSTRUCTION PAVEMENT TRANSITION DETAIL IS PROVIDED ON THE PLAN SET.

3. CONTRACTOR SHALL ENSURE POSITIVE DRAINAGE AWAY FROM BUILDINGS FOR ALL NATURAL AND PAVED AREAS UNLESS OTHERWISE DIRECTED BY ENGINEER OR NOTED ON THE PLANS.

4. PROPOSED ELEVATIONS ARE SHOWN TO FINISHED PAVEMENT OR GRADE UNLESS OTHERWISE SPECIFIED.

5. PARKING AREAS AND TRAVEL LANES ARE NOT TO BE PAVED UNTIL THE ENTIRE PROPOSED DRAINAGE SYSTEM HAS BEEN INSTALLED, COMPACTED PROPERLY, AND ALL PIPE CONNECTIONS COMPLETE.

6. DRAINAGE PIPING SHALL BE DOUBLE WALLED CORRUGATED PLASTIC PIPE, ADS-N12 OR EQUAL UNLESS OTHERWISE NOTED ON THE PLANS.

7. BACKFILL ADJACENT TO PIPES AND STRUCTURES SHALL BE OF THE TYPE AND QUALITY CONFORMING TO THAT AS SPECIFIED. BACKFILL SHALL BE PLACED IN LIFTS NOT TO EXCEED 8 INCHES IN THICKNESS AND COMPACTED TO 95% OF THE MAXIMUM DRY DENSITY WITH A MOISTURE CONTENT WITHIN +/- 2% OF OPTIMUM. ALL COMPACTION IS TO BE DETERMINED BY AASHTO METHOD T-99 OR ASTM D698/1557 AND ASTM D2434 FOR IN PLACE TESTING. TESTING OF BACKFILL MATERIAL SHALL BE THE RESPONSIBILITY OF THE CONTRACTOR AND WILL BE INSPECTED BY THE ENGINEER.

8. ALL DRAINAGE STRUCTURES AND PIPES MUST BE PROPERLY CONNECTED TO THE DRAINAGE SYSTEM PRIOR TO THE INSTALLATION OF ANY PAVEMENT. THIS INCLUDES THE STABILIZATION OF ALL DISTURBED AREAS CONTRIBUTING TO THE DRAINAGE SYSTEMS AND ANY STORMWATER DRAINAGE BASIN FLOORS AND SIDE SLOPES.

9. AT SUBSTANTIAL COMPLETION, ANY LOW LYING AREAS (NON-STORMWATER FEATURES) FOUND TO CREATE PONDING SHALL HAVE LOAM OR SURFACE TREATMENT REMOVED AND THE SUBGRADE MATERIAL SHALL BE REPAIRED AND REGRADED WITH GRANULAR NATIVE BACKFILL MATERIAL. AFTER BACKFILL, LOAM SHALL BE REPLACED AND RESEEDED. NO TOP DRESSING SHALL BE ALLOWED. REGRADED AREAS SHALL BE HOSE TESTED TO ENSURE POSITIVE DRAINAGE AND THE PONDING PROBLEM TO BE ALLEVIATED.

# STORMWATER FACILITY OPERATION & MAINTENANCE:

1. THE CONTRACTOR SHALL BE RESPONSIBLE FOR THE INSPECTION AND MAINTENANCE OF ALL EROSION CONTROL AND STORMWATER MANAGEMENT FACILITIES UNTIL THE PROJECT IS DEEMED COMPLETE BY THE OWNER AND ENGINEER.

2. THE CONTRACTOR SHALL INSPECT AND CLEAR ALL INLETS, MANHOLES, DRAINAGE BASINS, AND OTHER STRUCTURES OF SEDIMENT AND DEBRIS PRIOR TO THE OWNER'S ACCEPTANCE.

3. THE CONTRACTOR SHALL PROPERLY DISPOSE OF ALL SEDIMENT AND DEBRIS IN A PRE-APPROVED LOCATION AND IN ACCORDANCE WITH APPLICABLE LAWS.

4. IF REQUIRED, THE CONTRACTOR SHALL REFER TO THE STORMWATER POLLUTION PREVENTION PLAN (SWPPP) FOR INFORMATION REGARDING STORMWATER FACILITY OPERATION AND MAINTENANCE REQUIREMENTS. THE CONTRACTOR SHALL MAINTAIN A WORKING COPY OF THE SWPPP ON SITE AT ALL TIMES.

5. THE CONTRACTOR SHALL INSPECT ALL STORMWATER FACILITIES AFTER EVERY MAJOR RAINFALL EVENT FOR THE ENTIRE DURATION OF THE CONSTRUCTION PROJECT AND THE FIRST 3-MONTHS AFTER COMPLETION TO MONITOR SYSTEM OPERATION.

# EROSION & SEDIMENT CONTROL NOTES

1. THE SITE CONSTRUCTION FOREMAN SHALL BE RESPONSIBLE FOR THE DAILY INSPECTION AND MAINTENANCE OF ALL SEDIMENTATION AND EROSION CONTROL BARRIERS AND SHALL IMPLEMENT ALL NECESSARY MEASURES TO CONTROL EROSION AND PREVENT SEDIMENT FROM LEAVING THE SITE.

2. THE CONTRACTOR SHALL INSTALL ALL SEDIMENTATION AND EROSION CONTROL BARRIERS AS SHOWN ON THE PLANS AND AS DETERMINED NECESSARY IN THE FIELD BY THE ENGINEER BEFORE ANY CONSTRUCTION ACTIVITIES ARE TO BEGIN. THESE MEASURES SHALL BE INSPECTED, MAINTAINED AND REPLACED AS NECESSARY DURING THE ENTIRE CONSTRUCTION PERIOD OF THE PROJECT. PERIMETER EROSION AND SEDIMENTATION CONTROL BARRIERS SHALL REPRESENT THE LIMIT OF WORK AND ALL WORKERS SHALL BE INFORMED THAT NO CONSTRUCTION ACTIVITY IS TO OCCUR BEYOND THE LIMIT OF WORK AT ANY TIME THROUGH THE CONSTRUCTION PERIOD.

3. A MINIMUM SURPLUS OF 25-FEET OF SEDIMENTATION AND EROSION CONTROL BARRIER (SILT FENCE, STRAW BALE, &/OR SILT SOCK) SHALL BE STORED ONSITE AT ALL TIMES.

4. THE CONTRACTOR SHALL PREVENT ANY SEDIMENT TRANSPORT TO THE ADJACENT PROPERTIES DURING CONSTRUCTION AND UNTIL ACCEPTANCE BY THE OWNER/ENGINEER.

5. A CONSTRUCTION ENTRANCE SHALL BE CONSTRUCTED AS SHOWN IN THE DETAILS TO SHED DIRT FROM CONSTRUCTION VEHICLE TIRES. THE CRUSHED STONE PAD WILL BE REPLACED/CLEANED AS NEEDED TO MAINTAIN ITS EFFECTIVENESS AND RECONSTRUCTED AS NECESSARY DURING SEPARATE PHASES OF THE PROJECT.

6. THE LIMIT OF ALL CLEARING, GRADING AND DISTURBANCE SHALL BE KEPT TO A MINIMUM WITHIN THE PROPOSED AREA OF CONSTRUCTION. THE CONTRACTOR SHALL PHASE THE SITE WORK IN A MANNER TO MINIMIZE AREAS OF EXPOSED OR UNSTABILIZED SOIL. IF TREES ARE TO BE CUT ON THE ENTIRE SITE, ONLY THOSE AREAS WHICH ARE ACTIVELY UNDER CONSTRUCTION SHALL BE GRUBBED. THE REQUIRED SEDIMENTATION CONTROL FACILITIES MUST BE PROPERLY ESTABLISHED, CLEARLY VISIBLE AND IN OPERATION PRIOR TO INITIATING ANY LAND CLEARING ACTIVITY AND/OR OTHER CONSTRUCTION RELATED WORK.

7. IT IS THE CONTRACTOR'S RESPONSIBILITY TO MONITOR LOCAL WEATHER REPORTS DURING CONSTRUCTION AND PRIOR TO SCHEDULING EARTHMOVING OR OTHER CONSTRUCTION ACTIVITIES WHICH WILL LEAVE LARGE DISTURBED AREAS UNSTABILIZED. IF INCLEMENT WEATHER IS FORECAST, THE CONTRACTOR SHALL USE THEIR BEST PROFESSIONAL JUDGEMENT WHEN SCHEDULING CONSTRUCTION ACTIVITIES AND SHALL BE RESPONSIBLE FOR ENSURING THE NECESSARY SEDIMENTATION AND EROSION CONTROL BARRIERS ARE INSTALLED AND FUNCTIONING PROPERLY TO MINIMIZE EROSION FROM ANY IMPENDING WEATHER EVENTS.

8. SOIL EROSION AND SEDIMENTATION CONTROL MEASURES SHALL BE INSPECTED AND MAINTAINED ON WEEKLY BASIS AND AFTER EACH RAINFALL EVENT OF 0.25 INCH OR GREATER DURING CONSTRUCTION TO ENSURE THAT THE EROSION AND SEDIMENTATION CONTROL MEASURES ARE OPERATING/FUNCTIONING PROPERLY. IDENTIFIED DEFICIENCIES SHALL BE CORRECTED IMMEDIATELY AND NO LATER THAN 24 HOURS AFTER IDENTIFICATION.

9. SOIL STOCKPILES LEFT OVERNIGHT SHALL BE SURROUNDED ON THEIR PERIMETERS WITH SILT SOCK, SILT FENCE, STRAW BALES, OR A COMBINATION OF SILT FENCE WITH STRAW BALES.

10. DISTURBED AREAS AND SLOPES SHALL NOT BE LEFT UNATTENDED OR EXPOSED FOR EXCESSIVE PERIODS OF TIME SUCH AS DURING THE INACTIVE WINTER SEASON. THE CONTRACTOR SHOULD PROVIDE APPROPRIATE STABILIZATION PRACTICES ON ALL DISTURBED AREAS AS SOON AS POSSIBLE BUT NOT MORE THAN 14 DAYS AFTER THE CONSTRUCTION ACTIVITY IN THAT AREA HAS TEMPORARILY OR PERMANENTLY CEASED, TEMPORARY AREAS HAVING A SLOPE GREATER THAN 4H:1V SHALL BE REINFORCED WITH EROSION BLANKETS OR APPROVED EQUAL UNTIL THE SITE IS PROPERLY STABILIZED. TEMPORARY SWALES MAY ALSO BE REQUIRED IF DETERMINED NECESSARY IN THE FIELD BY THE ENGINEER.

11. THE CONTRACTOR SHALL INSTALL A SILT SACK OR APPROVED EQUIVALENT IN EACH EXISTING CATCH BASIN RECEIVING RUNOFF FROM THE SITE. UPON THE INSTALLATION OF ANY NEW CATCH BASIN, THE CONTRACTOR SHALL INSTALL A SILT SACK OR APPROVED EQUIVALENT. THESE ARE TO BE INSPECTED AFTER EACH SIGNIFICANT STORM EVENT AND EMPTIED AS NEEDED DURING THE ENTIRE CONSTRUCTION PERIOD.

12. SMALL SEDIMENTATION BASINS MAY BE CONSTRUCTED ON AN AS-NEEDED BASIS DURING CONSTRUCTION TO AID IN THE CAPTURE OF SITE RUNOFF AND SEDIMENT. IT WILL BE THE RESPONSIBILITY OF THE CONTRACTOR, IN CONSULTATION WITH THE ENGINEER, TO SIZE AND CONSTRUCT THESE BASINS IN APPROPRIATE LOCATIONS.

13. ALL EXITS FROM THE SITE SHALL BE SWEPT AS NECESSARY, INCLUDING ANY TRACKING TO ENSURE SEDIMENT IS CONTAINED ONSITE. PAVED AREAS SHALL BE SWEPT AS NEEDED TO REMOVE SEDIMENT OR POTENTIAL POLLUTANTS WHICH MAY ACCUMULATE DURING CONSTRUCTION ACTIVITIES.

14. ACCUMULATED SEDIMENT SHALL BE COLLECTED AND DISPOSED OF IN A PRE-APPROVED LOCATION BY THE CONTRACTOR AS DIRECTED BY THE ENGINEER.

15. THE CONTRACTOR SHALL PROVIDE ON SITE OR MAKE READILY AVAILABLE THE NECESSARY EQUIPMENT AND SITE PERSONNEL DURING CONSTRUCTION HOURS FOR THE DURATION OF THE PROJECT TO ENSURE ALL EROSION AND SEDIMENTATION CONTROL DEVICES ARE PROPERLY MAINTAINED AND REPAIRED IN A TIMELY AND RESPONSIBLE MANNER. IF SITE WORK IS SUSPENDED DURING THE WINTER MONTHS THE CONTRACTOR SHALL BE REQUIRED TO PROVIDE PERSONNEL AND EQUIPMENT EITHER ON SITE OR MAKE READILY AVAILABLE TO ENSURE ALL EROSION AND SEDIMENTATION CONTROL DEVICES ARE PROPERLY MAINTAINED AND REPAIRED IN A TIMELY AND RESPONSIBLE MANNER.

16. IF DEWATERING IS NECESSARY DURING CONSTRUCTION, IT SHALL BE THE RESPONSIBILITY OF THE CONTRACTOR TO IMPLEMENT PROPER MEASURES INCLUDING DEWATERING BAGS, TEMPORARY STRAW BALES, SILT FENCES, SILT SOCKS AND/OR OTHER APPROVED DEVICES. THE DEWATERING MEASURES SHALL BE APPROVED BY THE ENGINEER. DEWATERING BASINS SHALL NOT BE CONSTRUCTED WITHIN ANY RESOURCE AREAS OR BUFFER ZONES.

17. IT SHALL BE THE RESPONSIBILITY OF THE CONTRACTOR TO CONTROL DUST BY WATERING OR OTHER APPROVED METHODS AS NECESSARY, OR AS DIRECTED BY THE ENGINEER AT NO EXTRA COST TO THE OWNER.

18. THE CONTRACTOR SHALL ROUTINELY INSPECT THE PERIMETER OF THE SITE PROPERTY TO GATHER AND REMOVE CONSTRUCTION DEBRIS BEFORE IT LEAVES THE SITE. ALL DEMOLITION DEBRIS SHALL BE PROMPTLY REMOVED FROM THE SITE AND PROPERLY DISPOSED OF. ALL TRUCKS AND CONTAINERS LEAVING THE SITE SHALL BE COVERED.

19. BURIAL OF ANY STUMPS, SOLID DEBRIS, AND/OR STONES/BOULDERS ONSITE IS PROHIBITED UNLESS OTHERWISE INDICATED BY THE ENGINEER. NO ROAD SALT, SAND, OR OTHER DE-ICING CHEMICALS SHALL BE USED ON THE ACCESS ROADWAYS.

20. THE CONTRACTOR IS RESPONSIBLE FOR ROUTINE INSPECTION AND MAINTENANCE DURING CONSTRUCTION OF ALL STORMWATER FACILITIES INSTALLED OR IMPACTED BY THE PROJECT. ANY SEDIMENT OR DEBRIS COLLECTED WITHIN THESE FACILITIES FROM THE PROJECT WORK SHALL BE REMOVED PRIOR TO THE OWNER'S ACCEPTANCE.

21. SEDIMENTATION AND EROSION CONTROL BARRIERS AND INSPECTION REQUIREMENTS SHALL BE IN ACCORDANCE WITH ANY TOWN PERMIT CONDITIONS AND NPDES CONSTRUCTION GENERAL PERMIT.

22. SLOPES EQUAL OR GREATER THAN 2H:1V SHALL BE HYDROSEEDED THEN STABILIZED WITH EROSION CONTROL FABRIC UNLESS NOTED OTHERWISE ON THE PLANS.

# BASIC CONSTRUCTION SEQUENCE

1. SURVEY AND DELINEATE THE PROPOSED LIMIT OF DISTURBANCE AND LIMIT OF PERIMETER EROSION AND SEDIMENTATION CONTROL BARRIERS.

2. STAKE OUT THE LOCATIONS FOR EROSION AND SEDIMENTATION CONTROL BARRIERS (STRAW BALES, SILT FENCE, ETC.) AND INSTALL ACCORDING TO THE PLANS AND ANY APPLICABLE CITY PERMITS. IN NO CASE IS THE LIMIT OF WORK TO EXTEND BEYOND THE EROSION AND SEDIMENTATION CONTROL BARRIERS WHICH REPRESENTS THE LIMIT OF DISTURBANCE AS SHOWN ON THE APPROVED PROJECT PLANS. INSTALL SILT SACS AND HAVE EROSION AND SEDIMENTATION CONTROL BARRIERS INSPECTED BY ENGINEER AND ANY TOWN DEPARTMENTS, IF NECESSARY.

3. INSTALL TEMPORARY CONSTRUCTION ENTRANCES ONLY IN LOCATIONS INDICATED ON PLANS. NO OTHER ENTRANCES SHALL BE USED TO GAIN ACCESS TO THE SITE BY ANY CONSTRUCTION OR DELIVERY VEHICLES.

4. SURVEY AND STAKE OUT CLEARING LIMITS AND ACCESS DRIVEWAY.

5. BEGIN NECESSARY CLEARING, GRUBBING, TREE REMOVAL, AND SITE PREPARATION.

6. INSTALL TEMPORARY CONVEYANCE DEVICES (SWALES, PIPES, ETC.) AS NECESSARY TO CONVEY RUNOFF TO TREATMENT AREAS.

7. BEGIN ROUGH SITE GRADING AND BRING TO SUBGRADE ELEVATIONS. WORK SHALL PROGRESS DILIGENTLY TO MINIMIZE TIME SOILS ARE UN-STABILIZED.

8. BEGIN TO CONSTRUCT BUILDING, WALL, STORMWATER MANAGEMENT SYSTEM, AND UTILITIES. ANY EROSION CONTROL DEVICE DISTURBED DURING THE UNDERGROUND UTILITY CONSTRUCTION SHALL BE IMMEDIATELY REPAIRED OR REPLACED IN KIND AND STABILIZED. MODIFY TEMPORARY CONVEYANCE DEVICES AS NECESSARY TO CONVEY RUNOFF TO TREATMENT AREAS.

9. DO NOT OVER COMPACT SOILS IN AREAS OF PROPOSED INFILTRATION AND AVOID INFILTRATION AREAS WITH CONSTRUCTION EQUIPMENT. CONTRACTOR RESPONSIBLE FOR OVER EXCAVATION OF INFILTRATION AREAS IF CONSTRUCTION TRAFFIC ROUTES OCCUR THROUGH PROPOSED INFILTRATION AREAS. PARTICULAR CARE SHALL BE TAKEN TO PROTECT THE UNDERGROUND DRAINAGE BASINS FROM SEDIMENT.

10. PERMANENTLY SEED ALL DISTURBED AREAS OUTSIDE OF THE AREA TO BE PAVED. SEEDING SHALL OCCUR WITHIN EITHER THE SPRING OR FALL GROWING SEASON.

11. ONCE ALL UNDERGROUND UTILITIES HAVE BEEN CONSTRUCTED, PLACE COMPACTED GRAVEL FOUNDATION AND ROUGH GRADE THE ROADWAYS/PARKING AREAS IN ACCORDANCE WITH THE SITE PLANS AND IN ACCORDANCE WITH APPLICABLE STATE AND LOCAL REGULATIONS.

12. BEGIN DRIVEWAY, PARKING, MILLINGS YARD CONSTRUCTION PER SITE PLANS AND IN ACCORDANCE WITH APPLICABLE STATE AND LOCAL REGULATIONS. DRIVEWAY AND PARKING AREAS ARE NOT TO BE PAVED UNTIL THE ENTIRE PERMANENT DRAINAGE SYSTEM HAS BEEN INSTALLED AND ALL PIPE CONNECTIONS ARE COMPLETE.

13. FINISH PERMANENT STABILIZATION; SWEEP THE DRIVEWAY TO REMOVE ALL SEDIMENTS; THE CONTRACTOR SHALL CLEAN AND FLUSH THE DRAINAGE STRUCTURES AND PIPES AT THE END OF CONSTRUCTION AND ALL ACCUMULATED SEDIMENTS IN THE DRAINAGE BASINS SHALL BE REMOVED. CONTRACTOR SHALL INSPECT THE DRAINAGE NETWORK AND REPAIR ANY DAMAGE IMMEDIATELY.

14. COMPLETE ALL REMAINING PLANTING, SEEDING, AND FENCING.

15. REMOVAL OF ALL TEMPORARY SOIL EROSION AND SEDIMENTATION CONTROL MEASURES FOLLOWING VEGETATIVE ESTABLISHMENT OF ALL DISTURBED AREAS SHALL BE APPROVED BY THE ENGINEER AND THE TOWN, IF APPLICABLE AND WHEN THE CONTRIBUTING AREA HAS REACHED A MINIMUM OF 80% STABILIZATION.

# LEGEND

| | |
|---|---|
| | CATCH BASIN |
| CONC | CONCRETE |
| CBDH | CONCRETE BOUND WITH DRILL HOLE |
| EOP | EDGE OF PAVEMENT |
| ERAP | EDGE OF RECYCLED ASPHALT PAVEMENT |
| EM | ELECTRIC METER |
| | EROSION CONTROL BARRIER |
| 18 | EXISTING CONTOUR |
| | FLOOD ZONE LIMIT |
| F | FOUND |
| | GAS LINE |
| | HYDRANT |
| IP | IRON PIN |
| LSA | LANDSCAPED AREA |
| OHW | OVERHEAD WIRE |
| | PROPERTY LINE |
| 18 | PROPOSED CONTOUR |
| | SOIL CLASS BOUNDARY |
| | TEST PIT |
| | UTILITY POLE |

# LIST OF DRAWINGS


| DRAWING | SHEET |
|---|---|
| GENERAL NOTES | G-00 |
| EXISTING CONDITIONS | C-00 |
| SITE PLAN | C-01 |
| UTILITIES PLAN | C-02 |
| ON-SITE SANITARY DISPOSAL SYSTEM | C-03 |
| EROSION CONTROL PLAN | C-04 |
| WATERSHED AREAS | C-05 |
| TRAFFIC CIRULATION PLAN | C-06 |
| DETAILS | D-00 |


811 DigSafe MA-ME-NH-RI-VT
CONTRACTOR TO VERIFY ACTUAL LOCATION OF EXISTING UTILITY SERVICES IN THE FIELD PRIOR TO CONSTRUCTION.

NOT FOR CONSTRUCTION


GENCON
323 Manley Street
W. Bridgewater, MA
www.GenConDB.com

Green Seal Environmental, Inc.
114 State Road, Building B
Sagamore Beach, MA 02562
Tel: (508) 888-6034 www.gseenv.com


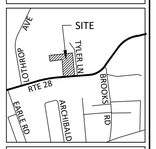


| No. | Date | Description |
|---|---|---|
| 2 | 1/8/21 | PB Comments |
| 1 | 12/10/20 | ZBA Comments |

DISCLAIMER

APPLICANT
**ALLEN HARBOR MARINE**
335 LOWER COUNTY RD, HARWICH PORT , MA

project
**ALLEN HARBOR MARINE BLDG**
282 ROUTE 28, HARWICH PORT, MA

COMMONWEALTH OF MASSACHUSETTS
STUART D. CLARK
CIVIL
No. 40697
REGISTERED PROFESSIONAL ENGINEER

| | |
|---|---|
| scale | NTS |
| date | December 17, 2020 |
| project | 20458 |
| drawn by | SDC/NHE |
| checked by | SDC |

GENERAL NOTES AND LEGEND

G-00

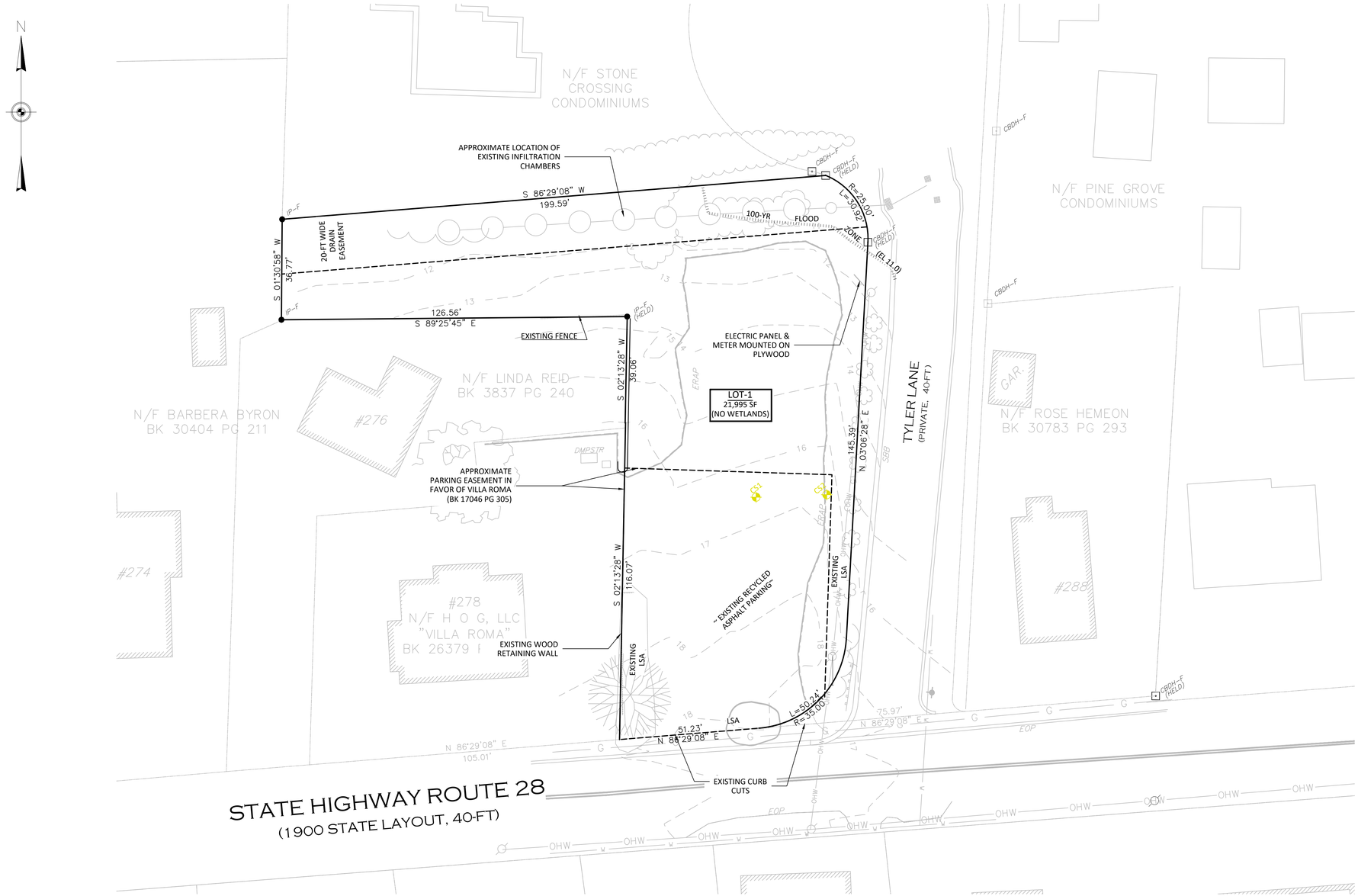


## NOTES

1. OWNER OF RECORD:
   COOL CHANGE, LLC
   9 CAPTAIN NOYES ROAD
   SOUTH YARMOUTH, MA 02664

2. ASSESSORS REFERENCE:
   MAP 12 LOT G 2–1

3. DEED REFERENCE:
   BOOK 33205, PAGE 156
   BARNSTABLE REGISTRY OF DEEDS

3. PLAN REFERENCE:
   PLAN BOOK 596, PAGE 23 (LOT –1)
   BARNSTABLE REGISTRY OF DEEDS

4. HORIZONTAL DATUM IS BASED UPON MASSACHUSETTS MAINLAND STATE PLANE COORDINATE SYSTEM, NAD83, IN US SURVEY FEET.

5. VERTICAL DATUM IS BASED UPON NAVD88, IN US SURVEY FEET.

6. UNDERGROUND UTILITIES DEPICTED HEREON ARE BASED UPON VISIBLE, ABOVE GROUND EVIDENCE AND RECORD INFORMATION AND ARE ONLY APPROXIMATE. CONTRACTOR IS RESPONSIBLE FOR TAKING ALL NECESSARY PRECAUTIONS BEFORE BEGINNING ANY EXCAVATION. (DIGSAFE 1–888–344–7233)

7. PARCEL AND RIGHT OF WAY LINES WERE OBTAINED WITH AN ON THE GROUND SURVEY PERFORMED BY GREEN SEAL ENVIRONMENTAL, INC. ON OCTOBER 20, 2020.

8. A PORTION OF THIS SITE IS LOCATED IN FEMA FLOOD ZONE AE WITH A BFE OF 11.00 NAVD88 AS SHOWN ON FIRM 25001C0611J, EFFECTIVE JULY 16, 2014.

9. NO CERTIFIED VERNAL POOLS, ESTIMATED HABITATS OF RARE WILDLIFE, OR PRIORITY HABITATS OF RARE SPECIECS ARE LOCATED ON OR WITHING 500 FEET OF THE SITE.

10. NO SIGNIFICANT SOIL IMPORT OR EXPORT IS PROPOSED AS PART OF THIS SITE DEVELOPMENT.

11. ALL PROPOSED SLOPES ARE 3:1 OR LESS AND WILL BE STABILIZED BY LANDSCAPING.

12. CONSTRUCTION MATERIALS WILL BE USED PROMPTLY AFTER DELIVERY AND ANY WASTE MATERIALS WILL BE STORED IN CONTAINERS AND PROPERLY REMOVED FROM THE SITE AND DISPOSED OF. DUE TO THE SMALL SIZE OF THE SITE, NO EXTENDED STORAGE OF MATERIALS WILL OCCUR.

13. ALL CONSTRUCTION VEHICLES SHALL PARK ON SITE. PARKING OF CONSTRUCTION VEHICLES OUTSIDE OF SITE PROPERTY IS PROHIBITED

**NOT FOR CONSTRUCTION**

0 20 40 60 80

DRAWING SCALE: 1" = 20'

GENCON
323 Manley Street
W. Bridgewater, MA
www.GenConDB.com

Green Seal Environmental, Inc.
114 State Road, Building B
Sagamore Beach, MA 02562
Tel: (508) 888-6034 www.gseenv.com

| No. | Date | Description |
|---|---|---|
| 2 | 1/8/21 | PB Comments |
| 1 | 12/10/20 | ZBA Comments |

APPLICANT
**ALLEN HARBOR MARINE**
335 LOWER COUNTY RD, HARWICH PORT, MA

project
**ALLEN HARBOR MARINE BLDG**
282 ROUTE 28, HARWICH PORT, MA

COMMONWEALTH OF MASSACHUSETTS
STUART D. CLARK
CIVIL
No. 40697
REGISTERED PROFESSIONAL ENGINEER

scale 1"=20'
date December 17, 2020
project 20458
drawn by SDC/NHE
checked by SDC

EXISTING CONDITIONS

**C-00**

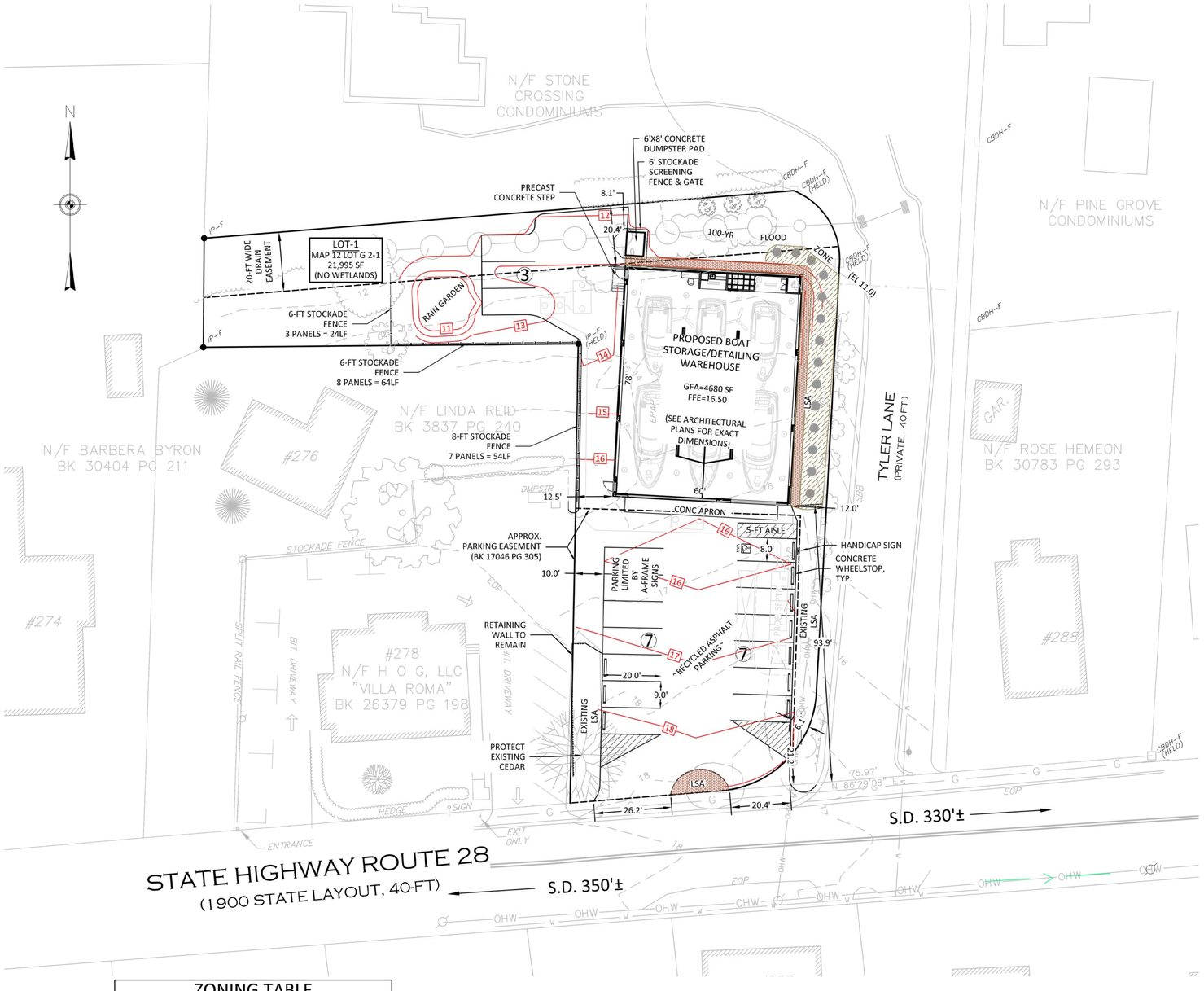


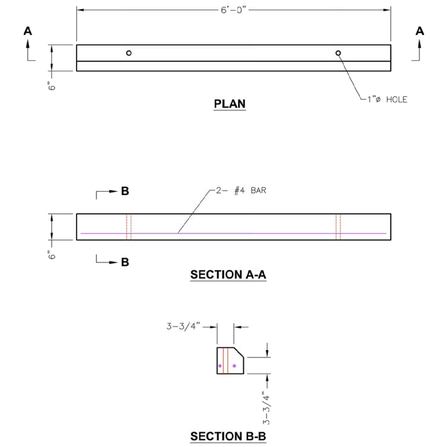


GENERAL NOTES:
1. CONCRETE: 28 DAY COMPRESSIVE STRENGTH F'C = 4,000 PSI.
2. STEEL REINFORCEMENT: ASTM A-615, GRADE 60.

## CONCRETE WHEELTOP DETAIL

NOT TO SCALE

## TYPICAL PLASTIC A-FRAME SIGN

NOT TO SCALE

NOTES:
1. HDPE
2. SIGN AREA24"X36" (WxH)

## ZONING TABLE

ZONE: COMMERCIAL HIGHWAY (C-H-1)

PROPOSED USE: MARINE STORAGE (PERMITTED)

| MIN FRONTAGE | REQUIRED | PROPOSED | |
|---|---|---|---|
| AREA (OTHER PERMITTED USE) | 20,000 SF | TOTAL 21,995 SF<br>21,093 SF (UPLAND)<br>0 SF (WETLANDS)<br>902 SF (FLOOD PLAIN) | |
| FRONT YARD SETBACK | 25' | 12' TYLER LN 94.4' RTE 28 | VARIANCE GRANTED **CASE # 2020-41** |
| SIDE YARD SETBACK | 10' | 12.5' | |
| REAR YARD SETBACK | 10' | 20.4' | |
| FRONT PARKING SETBACK | 20' | 4.8' TYLER LN 18' RTE 28 | VARIANCE GRANTED **CASE # 2020-41** |
| SIDE/REAR PARKING SETBACK | 10' | 10' | |
| MAX BUILDING COVERAGE | 30% | 21% | |
| MAX LOT COVERAGE | 70% | 58% | |
| MAXIMUM BUILDING HEIGHT | 30' | 25.5' | |

## PARKING CALCULATION

MARINA OR BOAT YARD USE:
1 PER EMPLOYEE MAXIMUM SHIFT, PLUS 1 PER SLIP, OR 1 SPACE PER DRY STORAGE CAPACITY, WHICHEVER IS GREATER, AND 1 PER EACH 2 MOORINGS ASSIGNED TO THE MARINA OR BOAT YARD
EMPLOYEES (4) = 4
BOAT STORAGE (6)= 6
10 REQUIRED (18 PROVIDED)

521 CMR 23.00 ACCESSIBLE SPACE REQUIREMENT
(1 TO 25 SPACES) = 1 WITH 1 VAN ACCESSIBLE ( 1 VAN ACCESSIBLE PROVIDED)

THIS PARCEL IS SUBJECT TO A PARKING EASEMENT AND AGREEMENT WITH OWNER'S OF VILLA ROMA RESTAURANT AS SHOWN ON ASSESSORS MAP 12 AS LOT G 1-A. (SEE BK 17046 PG 305) THE AGREEMENT ALLOWS THE COOPERATIVE USE OF THE PARKING LOT. THE AGREEMENT ALLOWS THE RESTAURANT TO USE THE PARKING LOT EXCLUSIVELY FROM 5PM TO 1AM (WITH A 3 SPACE EXCEPTION FROM 5 PM TO 7 PM). BOTH PARTIES MAY USE THE LOT FROM 1 AM TO 5 PM.

PARKING NOTE:
1. PARKING IN THESE TWO SPOTS IS REGULATED BY THE BUILDING OWNER THROUGH THE USE OF SIGNS MOUNTED TO SANDWICH BOARDS OR SAWHORSES.

**NOT FOR CONSTRUCTION**

0 20 40 60 80

DRAWING SCALE: 1'' = 20'

GENCON
323 Manley Street
W. Bridgewater, MA
www.GenConDB.com

Green Seal Environmental, Inc.
114 State Road, Building B
Sagamore Beach, MA 02562
Tel: (508) 888-6034 www.gseenv.com

| No. | Date | Description |
|---|---|---|
| 3 | 1/27/21 | PB Comments |
| 2 | 1/8/21 | PB Comments |
| 1 | 12/10/20 | ZBA Comments |

owner
**ALLEN HARBOR MARINE**
335 LOWER COUNTY RD, HARWICH PORT , MA

project
**ALLEN HARBOR MARINE BLDG**
282 ROUTE 28, HARWICH PORT, MA

COMMONWEALTH OF MASSACHUSETTS
STUART D. CLARK
CIVIL
No. 40697
REGISTERED PROFESSIONAL ENGINEER

| | |
|---|---|
| scale | 1"=20' |
| date | December 17, 2020 |
| project | 20458 |
| drawn by | SDC/NHE |
| checked by | SDC |

SITE PLAN

**C-01**

S:\CLIENTS\GENCRON CONSTRUCTION, LLC\GCLL-2020-0001 (HARWICH)\CAD\BPR\R-31(HW)(7/27/2021 11:36 AM

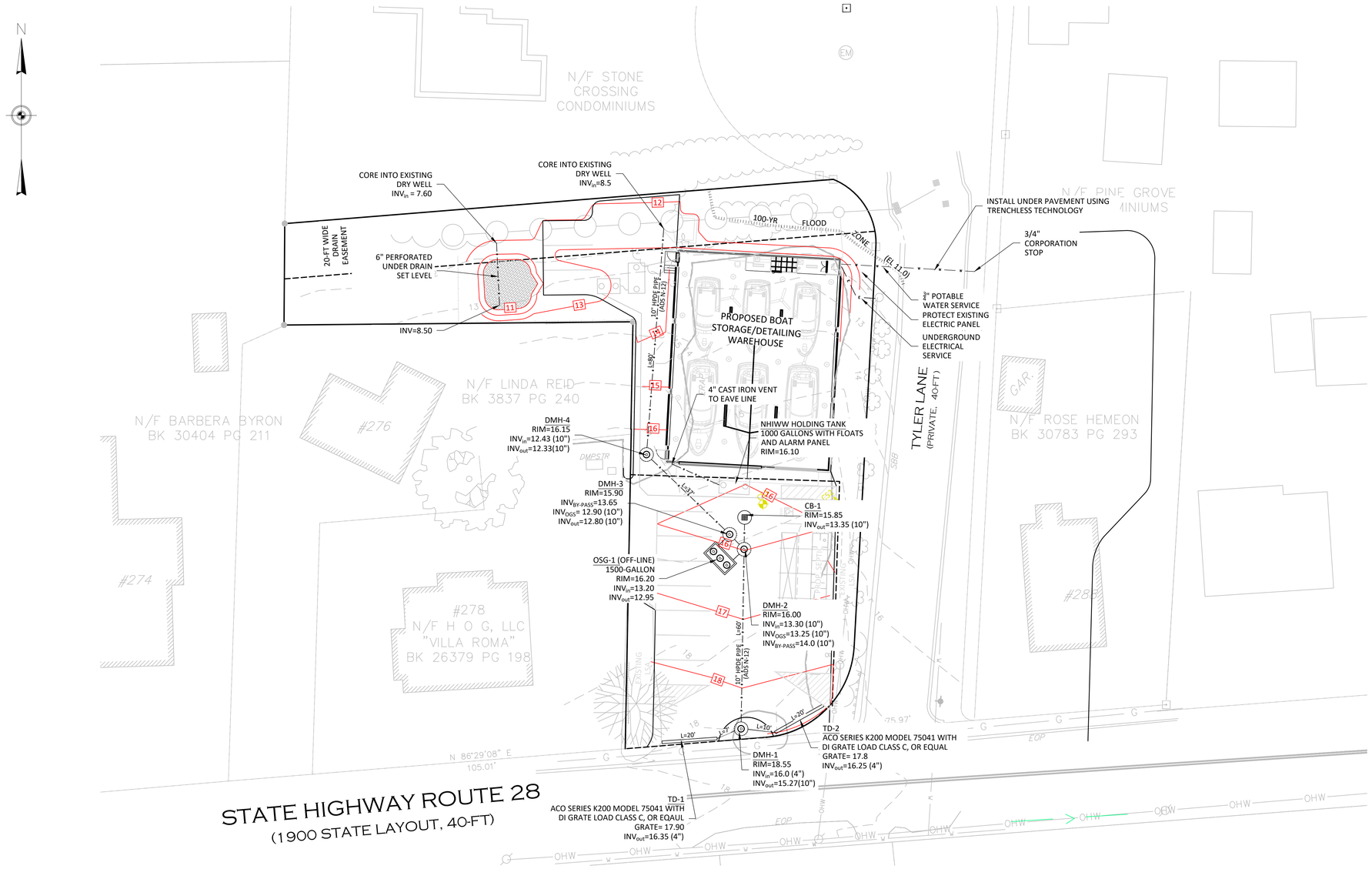


**NOT FOR CONSTRUCTION**

0 20 40 60 80

DRAWING SCALE: 1" = 20'


GENCON
323 Manley Street
W. Bridgewater, MA
www.GenConDB.com

Green Seal Environmental, Inc.
114 State Road, Building B
Sagamore Beach, MA 02562
Tel: (508) 888-6034 www.gseenv.com


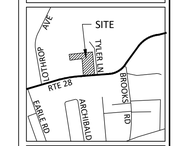


| No. | Date | Description |
|---|---|---|
| 2 | 1/8/21 | PB Comments |
| 1 | 12/10/20 | ZBA Comments |

APPLICANT
**ALLEN HARBOR MARINE**
335 LOWER COUNTY RD, HARWICH PORT, MA

project
**ALLEN HARBOR MARINE BLDG**
282 ROUTE 28, HARWICH PORT, MA

COMMONWEALTH OF MASSACHUSETTS
STUART D. CLARK
CIVIL
No. 40697
REGISTERED PROFESSIONAL ENGINEER

scale **1"=20'**
date **December 17, 2020**
project **20458**
drawn by **SDC/NHE**
checked by **SDC**

UTILITIES PLAN

**C-02**

S:\CLIENTS\GENCON_CONSTRUCTION_LLC\CELL-2020-0001 (HARWICH)\CAD\BPTP\B-2\DWG\B/2021 2:13 PM

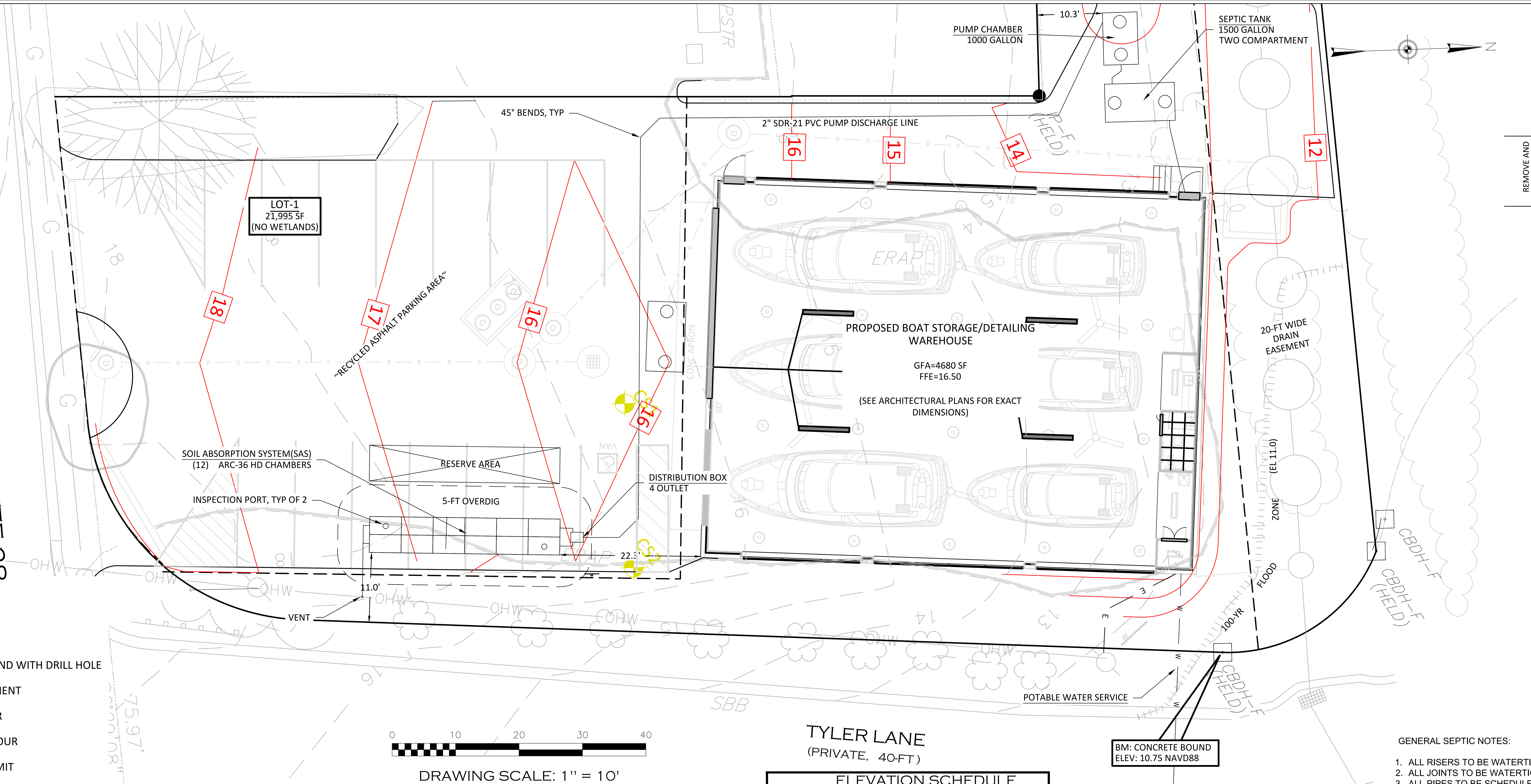


## LEGEND

| | |
|---|---|
| | CATCH BASIN |
| CONC | CONCRETE |
| CBDH | CONCRETE BOUND WITH DRILL HOLE |
| EOP | EDGE OF PAVEMENT |
| EM | ELECTRIC METER |
| —18— | EXISTING CONTOUR |
| | FLOOD ZONE LIMIT |
| F | FOUND |
| —G— | GAS LINE |
| | HYDRANT |
| IP | IRON PIN |
| LSA | LANDSCAPED AREA |
| —OHW— | OVERHEAD WIRE |
| 18 | PROPOSED CONTOUR |
| | TEST PIT |
| | UTILITY POLE |

## TEST PIT INFORMATION

DEEP OBSERVATION HOLE #CS1
SURFACE EL=16.51 NAVD88

| DEPTH FROM SURFACE FEET | INCHES | SOIL HORIZON | SOIL TEXTURE (USDA) | SOIL COLOR (MUNSELL) | SOIL MOTTLING | OTHER (STRUCTURE, STONES, BOULDERS CONSISTENCY, % GRAVEL) |
|---|---|---|---|---|---|---|
| 1 | 0-15" | A | LOAMY SAND | 10YR 4/2 | | |
| 2 | 15-33" | B | LOAMY SAND | 10YR 5/6 | | |
| 3–4 | 33-58" | C1 | FINE TO MEDIUM SAND | 2.5Y 6/6 | SAS LOCATON | |
| 5–11 | 58-132" | C2 | FINE TO MEDIUM SAND | 10Y R 6/8 | PERC | |
| | | | BOTTOM OF HOLE=5.51 | | | |

REMOVE AND REPLACE ALL SOILS TO EL. 10.51

NO GROUNDWATER ENCOUNTERED
SHGW: BOTTOM OF HOLE = EL 5.5 NAVD88
TEST PERFORMED:12/20/99
SOIL EVALUATOR: C. SHORT
WITNESS: M. LADUE

## TEST PIT INFORMATION

DEEP OBSERVATION HOLE #CS2
SURFACE EL=16.25 NAVD88

| DEPTH FROM SURFACE FEET | INCHES | SOIL HORIZON | SOIL TEXTURE (USDA) | SOIL COLOR (MUNSELL) | SOIL MOTTLING | OTHER (STRUCTURE, STONES, BOULDERS CONSISTENCY, % GRAVEL) |
|---|---|---|---|---|---|---|
| 1 | 0-12" | A | LOAMY SAND | 10YR 4/2 | | |
| 2 | 12-36" | B | LOAMY SAND | 10YR 5/6 | | |
| 3–11 | 36-132" | C1 | MED TO COARSE SAND | 10YR 6/8 | PERC | EL. 11.08 |
| | | | BOTTOM OF HOLE=5.25 | | | |

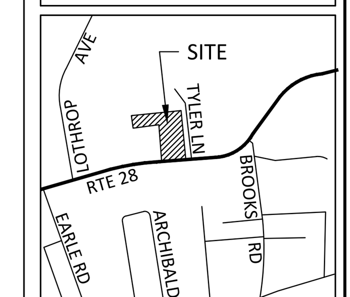


## ELEVATION SCHEDULE

| | |
|---|---|
| TOP OF FOUNDATION | 18.00 |
| INVERT @ FOUNDATION | 10.50 |
| INVERT INTO SEPTIC TANK | 10.25 |
| INVERT OUT OF SEPTIC TANK | 10.00 |
| INVERT INTO PUMP CHAMBER | 9.90 |
| INVERT INTO DISTRIBUTION BOX | 13.82 |
| INVERT OUT OF DISTRIBUTION BOX | 13.65 |
| BOTTOM OF S.A.S. | 12.67 |
| BREAKOUT ELEVATION (TOP OF CHAMBER) | 115.43 |
| ESTIMATED SEASONAL HIGH GROUNDWATER (TEST PIT CS1) | 5.51 |

GENERAL NOTES

THE SANITARY DISPOSAL SHALL BE CONSTRUCTED IN STRICT CONFORMANCE WITH THE STATE ENVIRONMENTAL CODE, TITLE V, AND REGULATION OF THE LOCAL BOARD OF HEALTH.

WHERE REQUIRED, ALL UNSUITABLE MATERIAL SHALL BE REMOVED AND REPLACED TO THE LIMITS SHOWN OR NOTED ON THE PLAN. REPLACEMENT FILL SHALL CONFORM WITH REQUIREMENTS OF 310CMR15.255(3).

ALL BENCHMARKS SHOWN HEREON MUST BE VERIFIED FOR CONSISTENCY BY THE CONTRACTOR PRIOR TO CONSTRUCTION. ANY DISCREPANCIES MUST BE RESOLVED BY THE DESIGN ENGINEER PRIOR TO CONSTRUCTION.

UNDERGROUND UTILITIES SHOWN HEREON HAVE BEEN COMPLIED FROM RECORD PLANS AND BEST AVAILABLE INFORMATION. THESE UTILITIES HAVE NOT BEEN FIELD VERIFIED AND THE ACTUAL LOCATION IS NOT GUARANTEED. THE CONTRACTOR SHALL FIELD VERIFY ALL UTILITIES AND OTHER SUBSURFACE STRUCTURES PRIOR TO CONSTRUCTION. THE CONTRACTOR SHALL CONTACT DIG-SAFE AT 1-888-344-7233 A MINIMUM OF 72-HOURS PRIOR TO EXCAVATION FOR UTILITY MARK OUT. THE CONTRACTOR SHALL ALSO CONTACT VARIOUS LOCAL COMPANIES AND/OR AGENCIES WHO DO NOT PARTICIPATE IN THE DIG-SAFE PROGRAM FOR ADDITIONAL UTILITY MARK OUT.

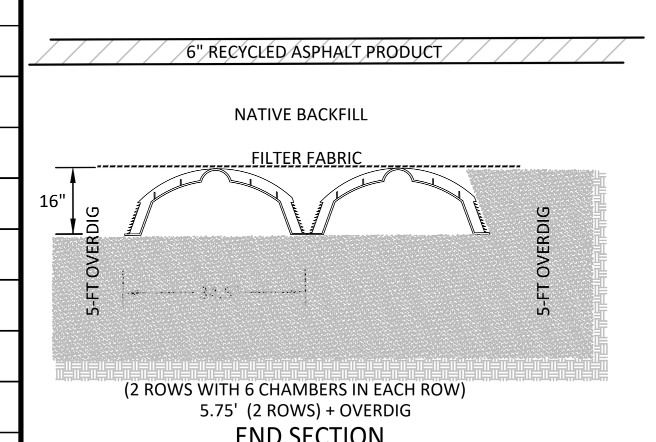


END SECTION

GENERAL SEPTIC NOTES:

1. ALL RISERS TO BE WATERTIGHT.
2. ALL JOINTS TO BE WATERTIGHT.
3. ALL PIPES TO BE SCHEDULE 40.
4. THE SYSTEM WILL BE AGGREGATE FREE.
5. ALL COMPONENTS TO HAVE A MINIMUM OF 12" AND A MAXIMUM OF 36" OF COVER.
6. CONTRACTOR TO VERIFY ALL ELEVATIONS AND UTILITY LOCATIONS PRIOR TO CONSTRUCTION ANY DIFFERENCES SHALL BE BROUGHT TO THE ATTENTION OF THE ENGINEER.
7. ALL SEPTIC SYSTEM COMPONENTS TO BE MARKED WITH MAGNETIC MARKING TAPE.
8. THERE ARE NO KNOWN CONFLICTS WITH TITLE V, SECTION 15.220(4)(K) (LOCATION OF PUBLIC AND PRIVATE WATER SUPPLIES)
9. THERE ARE NO KNOWN SOURCES OF WATER SUPPLY, STREAMS OR DRAINS WITHIN 100' OF THE PREMISES.
10. THE EXISTING SEPTIC SYSTEM IS TO BE REMOVED IN ACCORDANCE WITH TITLE 5.
11. A ZABEL FILTER IS TO BE INSTALLED AT THE OUTLET THE OF THE SEPTIC TANK.
12. THE ZABEL FILTER IS TO BE CLEANED ON AN ANNUAL BASIS.
13. USE (12) ARC36HC IN AN AGGREGATE FREE BED. ( SEE DEP APPROVAL LETTER X264258) DATED JUNE 12, 2015.
14. COMPONENTS NOT TO BE BACKFILLED OR CONCEALED WITHOUT INSPECTION BY BOH AND PERMISSION OBTAINED FROM BOH.
15. THE UTILITY INFORMATION SHOWN ON THIS PLAN HAS BEEN COMPILED FROM SURFACE EVIDENCE AND RECORD PLANS. BEFORE CONSTRUCTION, THE APPROPRIATE UTILITY COMPANY AND DIG-SAFE 888-DIG-SAFE SHOULD BE CONTACTED.
16. STOCK PILING OF MATERIALS, PARKING OR VEHICULAR TRAFFIC PROHIBITED OVER THE LEACHING AREA DURING CONSTRUCTION.
17. SYSTEM AREA TO BE STAKE AND FLAGGED UNTIL A CERTIFICATE OF COMPLIANCE IS ISSUED.
18. THE SYSTEM IS NOT LOCATED ON A NITROGEN SENSITIVE AREA.

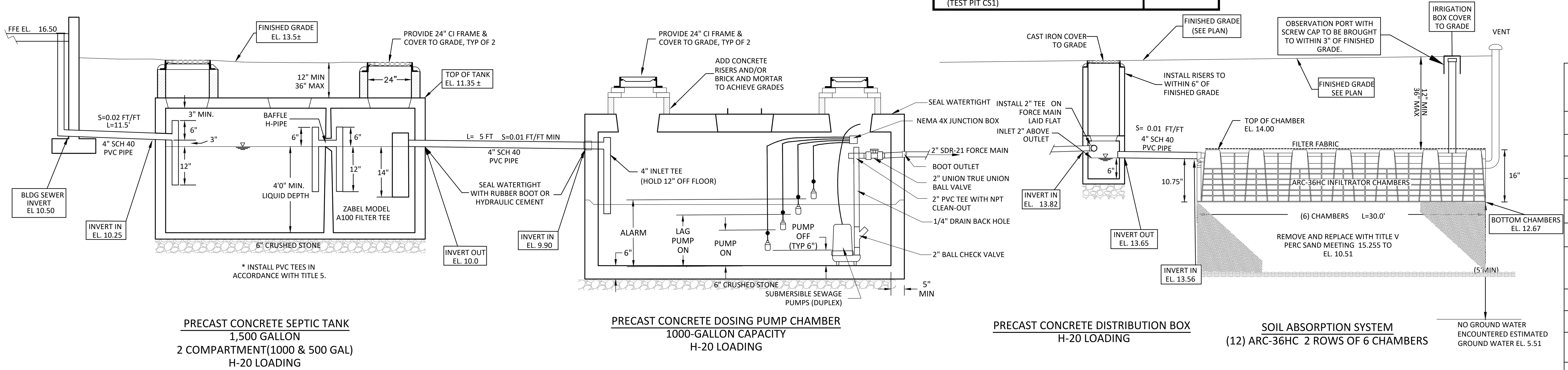


## PUMP ELEVATION SCHEDULE

| | EL. |
|---|---|
| CHAMBER FLOOR | 5.23 |
| LEAD/LAG PUMP OFF | 5.73 |
| LEAD PUMP ON | 6.23 |
| LAG PUMP ON | 6.73 |
| HIGH–WATER ALARM | 7.23 |
| EMERGENCY STORAGE (PUMP ON TO $INV_{IN}$) | 1160 GAL |
| DOSE VOLUME | 160 GAL |
| DOSES PER DAY | 1 |
| APPROXIMATE PUMP RUN TIME | 8 MIN |
| TDH | 15.5' |

## DESIGN CALCULATIONS

DESIGN FLOW: *310CMR15.203*
FACTORY, INDUSTRIAL PLANT, WAREHOUSE OR DRY STORAGE SPACE WITHOUT CAFETERIA — 15 GPD PER EMPLOYEE
DESIGN FLOW= 6 EMPLOYEES x 15 GPD/EMPLOYEE=90 GPD
*(USE DESIGN FLOW OF 200 GPD)*

SEPTIC TANK: *310CMR15.223*
DESIGN FLOW = 200 GPD
X 200%
REQUIRED SIZE = 400 GAL
USE 2 COMPARTMENT TANK
COMPARTMENT 1 TANK 1,000 GAL
COMPARTMENT 2 TANK 500 GAL
1500 GAL

SOIL ABSORPTION SYSTEM *310CMR15.242*
DESIGN PERCOLATION RATE: <5 MPI
SOIL TEXTURAL CLASS: CLASS I
LONG TERM ACCEPTANCE RATE (LTAR): 0.74 GPD/SF

AREA REQUIRED: 200 GPD/0.74 GPD/SF = 270 SF

USE ARC–36 HIGH CAPACITY INFILTRATOR CHAMBERS
AGGREGATE FREE – BED CONFIGURATION

NUMBER OF CHAMBERS REQUIRED:
270 SF/4.80 SF/LF = 56 LF
56 LF/(5 LF/CHAMBER) = 11 CHAMBERS

USE 2 ROWS OF 6 CHAMBERS = 12 CHAMBERS TOTAL
12 x 5 LF x 4.80 SF/LF x 0.74 GPD/SF = 213 GPD

SYSTEM IS NOT DESIGNED FOR A GARBAGE GRINDER

SANITARY SYSTEM PROFILE
NOT TO SCALE

PRECAST CONCRETE NOTES:

1. CONCRETE: 5,000 PSI MINIMUM AFTER 28 DAYS.
2. DESIGN CONFORMS WITH 310 CMR 15.00 DEP TITLE 5 REGS FOR SEPTIC TANKS.
3. ALL REINFORCEMENT PER ASTM C1227
4. DESIGNED FOR AASHTO HS-20 LOADING, COVER 1-5 FT.
5. TONGUE AND GROOVE JOINT SEALED WITH BUTYL RESIN, INLET HEIGHT MAY INCREASE SLIGHTLY DUE TO THE BUTYL RESIN USED.

DUPLEX PUMPS SHALL ALTERNATE OPERATION. SUBMERSIBLE SEWAGE PUMP(S) SHALL BE CAPABLE OF PUMPING 20 GPM AGAINST THE TOTAL DYNAMIC HEAD (TDH) AND SHALL BE CAPABLE OF PASSING A 1" SOLID.

GENCON
323 Manley Street
W. Bridgewater, MA
www.GenConDB.com

GREEN SEAL ENVIRONMENTAL · ENGINEERING · SURVEY · ENERGY · Est. 1997
Green Seal Environmental, Inc.
114 State Road, Building B
Sagamore Beach, MA 02562
Tel: (508) 888-6034 www.gseenv.com

| No. | Date | Description |
|---|---|---|
| 2 | 1/8/21 | PB Comments |
| 1 | 12/10/20 | ZBA Comments |

DISCLAIMER

APPLICANT
**ALLEN HARBOR MARINE**
335 LOWER COUNTY RD, HARWICH PORT, MA

project
**ALLEN HARBOR MARINE BLDG**
282 ROUTE 28, HARWICH PORT, MA

COMMONWEALTH OF MASSACHUSETTS
STUART D. CLARK
CIVIL
No. 40697
REGISTERED PROFESSIONAL ENGINEER

| | |
|---|---|
| scale | AS NOTED |
| date | December 17, 2020 |
| project | 20458 |
| drawn by | SDC/NHE |
| checked by | SDC |

ON-SITE SANITARY DISPOSAL SYSTEM

**C-03**

S:\CLIENTS\GENDRON CONSTRUCTION, LLC\GCLL-2020-0001 (HARWICH)\CAD\BPP(R.2).DWG1/8/2021 2:13 PM

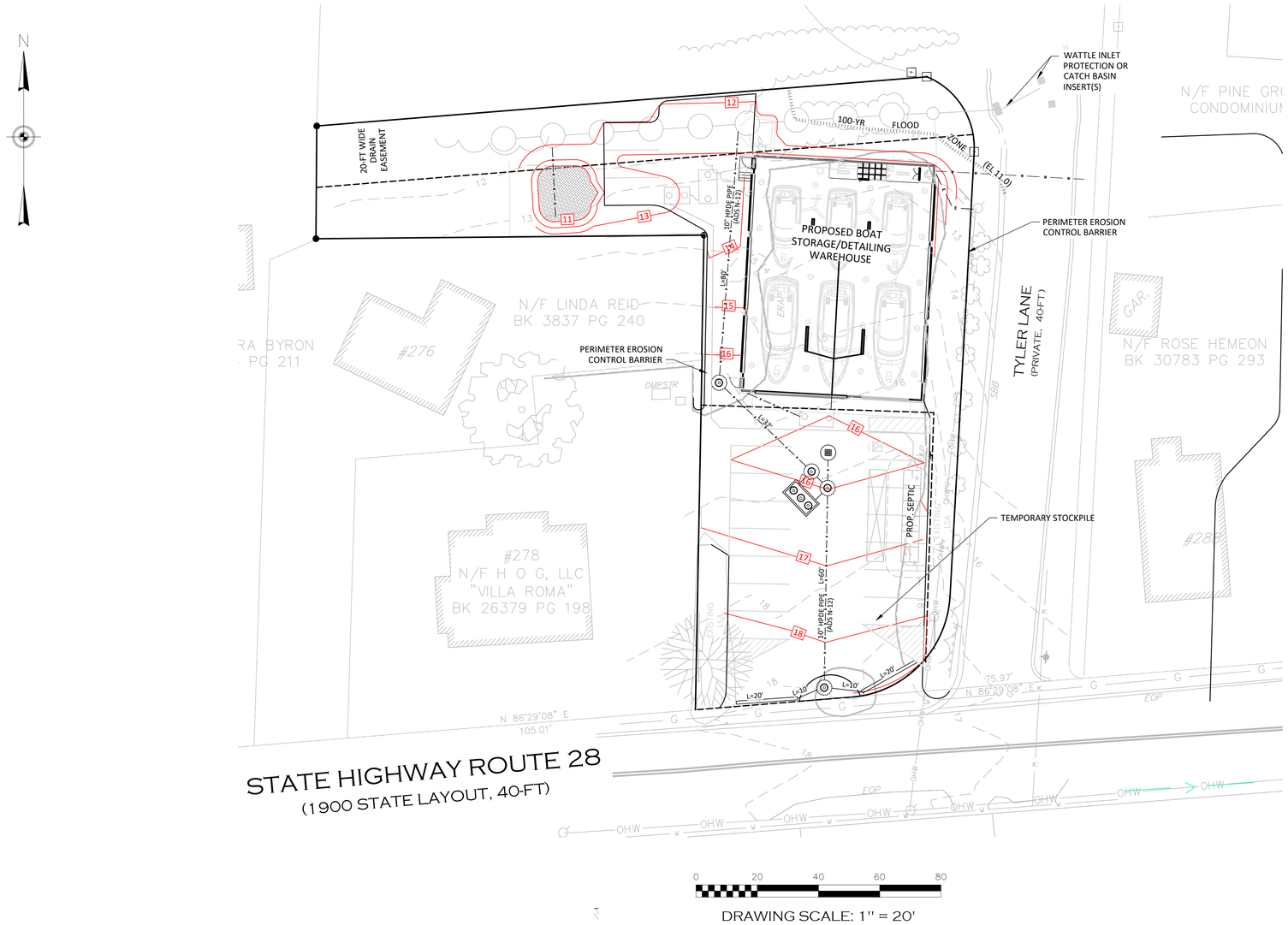


## GENERAL CONSTRUCTION SEQUENCE

1. INSTALL PERIMETER EROSION CONTROL MEASURES AND CATCH BASIN CONTROLS.
2. INSTALL TEMPORARY CONSTRUCTION FENCE IF DESIRED.
3. SCRAPE AND STOCKPILE EXISTING RECYCLED ASPHALT PAVEMENT. RING WITH WATTLE EROSION CONTROL.
4. EXCAVATE AND INSTALL RAIN GARDEN INCLUDING DRAIN PIPE CONNECTIONS TO EXISTING INFILTRATION.
5. EXCAVATE AND INSTALL SEPTIC TANK AND PUMP CHAMBERS.
6. EXCAVATE AND INSTALL BUILDING FOUNDATION. CONSTRUCT BUILDING.
7. EXCAVATE AND INSTALL REMAINING STORMWATER PIPING AND STRUCTURES, REMAINING SEPTIC COMPONENTS, AND UTILITY CONNECTIONS.
8. SPREAD AND AUGMENT RECYCLED ASPHALT PAVEMENT AS NECESSARY. ROLL AND COMPACT.
9. FINAL GRADING AND LANDSCAPING.
10. REMOVE EROSION CONTROLS AFTER SOILS ARE STABILIZED.

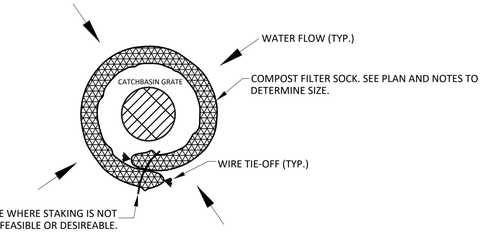


PLAN

NOTES:

1. OVERLAP ENDS OF SOCK PER MANUFACTURERS RECOMMENDATIONS - ONE FOOT MINIMUM, 3 FEET MAXIMUM.
2. USE 8"-12" DIA. SOCK IN CURBSIDE OR TRAFFICED AREAS.
3. USE 12"-18" DIA. SOCK IN NON-TRAFFICED AREAS.
4. INSPECT AND MAINTAIN THROUGHOUT CONSTRUCTION.
5. SOCK AND COMPOST MATERIAL TO BE REMOVED FROM SITE WHEN CONSTRUCTION IS COMPLETE.

## WATTLE INLET PROTECTION

NOT TO SCALE

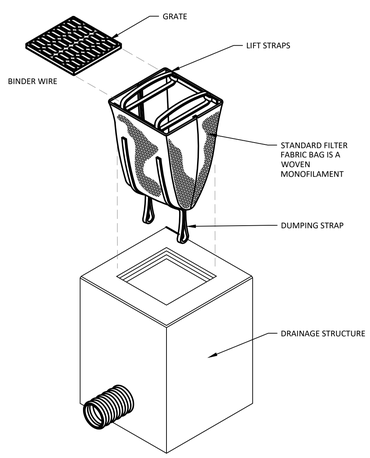


## CATCH BASIN INSERT

NOT TO SCALE

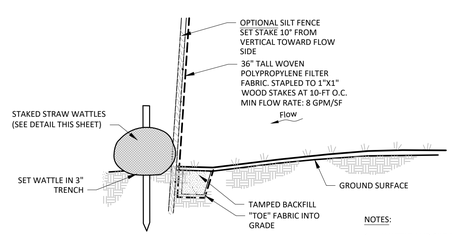


NOTES:

1. WATTLE AND SILT FENCE COMBINATION SHALL BE INSTALLED AS THE PRIMARY PERIMETER EROSION CONTROL DEVICE AT LOCATIONS SHOWN ON SHEET C-02.
2. SILT FENCE AND POSTS FROM APPROVED MANUFACTURER/SUPPLIER SET TO MANUFACTURERS SPECIFICATION.
3. STRAW BALES MAY BE USED AS AN ALTERNATE FOR THE WATTLES AS SHOWN BELOW .

## EROSION CONTROL BARRIER

NOT TO SCALE

CERTIFIED PROFESSIONAL IN EROSION AND SEDIMENT CONTROL
CPESC
John D. O'Leary Jr.
No. 5203

**NOT FOR CONSTRUCTION**


GENCON
323 Manley Street
W. Bridgewater, MA
www.GenConDB.com

Green Seal Environmental, Inc.
114 State Road, Building B
Sagamore Beach, MA 02562
Tel: (508) 888-6034 www.gseenv.com

| No. | Date | Description |
|---|---|---|
| 2 | 1/8/21 | PB Comments |
| 1 | 12/10/20 | ZBA Comments |

APPLICANT
**ALLEN HARBOR MARINE**
335 LOWER COUNTY RD, HARWICH PORT , MA

project
**ALLEN HARBOR MARINE BLDG**
282 ROUTE 28, HARWICH PORT, MA

COMMONWEALTH OF MASSACHUSETTS
STUART D. CLARK
CIVIL
No. 40697
REGISTERED PROFESSIONAL ENGINEER

scale **1"=20'**
date **December 17, 2020**
project **20458**
drawn by **SDC/NHE**
checked by **SDC**

EROSION AND SEDIMENT CONTROL PLAN

**C-04**


D:\CLIENTS\GENCON, CONSTRUCTION, LLC\CELL-2020-0001 (HARWICH)\CAD\DRFTR 2\TWO\19\2021 2:13 PM

**EXISTING CONDITION WATERSHED AREAS**

**POST DEVELOPMENT WATERSHED AREAS**

**RECYCLED APHLALT PRODUCT (CN 96)**

**ROOF & APRON AREA (CN 98)**

**GRASS/LANDSCAPE**

**NOT FOR CONSTRUCTION**

0 30 60 90 120

DRAWING SCALE: 1" = 30'


GENCON
323 Manley Street
W. Bridgewater, MA
www.GenConDB.com

Green Seal Environmental, Inc.
114 State Road, Building B
Sagamore Beach, MA 02562
Tel: (508) 888-6034 www.gseenv.com

| No. | Date | Description |
|---|---|---|
| 2 | 1/8/21 | PB Comments |
| 1 | 12/10/20 | ZBA Comments |

APPLICANT
**ALLEN HARBOR MARINE**
335 LOWER COUNTY RD, HARWICH PORT, MA

project
**ALLEN HARBOR MARINE BLDG**
282 ROUTE 28, HARWICH PORT, MA

COMMONWEALTH OF MASSACHUSETTS
STUART D. CLARK
CIVIL
No. 40697
REGISTERED PROFESSIONAL ENGINEER

scale **1"=30'**
date **December 17, 2020**
project **20458**
drawn by **SDC/NHE**
checked by **SDC**

WATERSHED AREAS

**C-05**

S:\CLIENTS\GENCON_CONSTRUCTION_LLC\CELL-2020-0001 (HARWICH)\CAD\GPPR\P-01.DWG\19\2021 2:13 PM

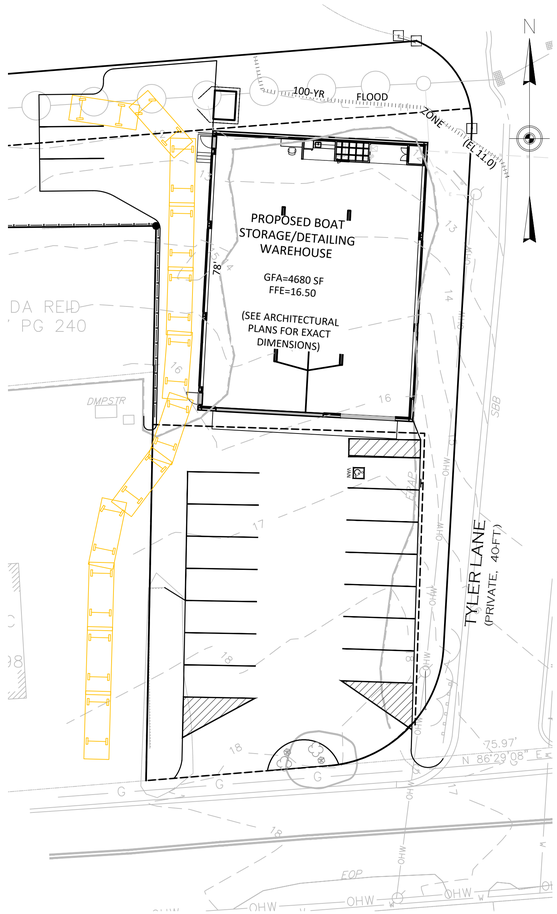


RESTAURANT EMPLOYEE INGRESS

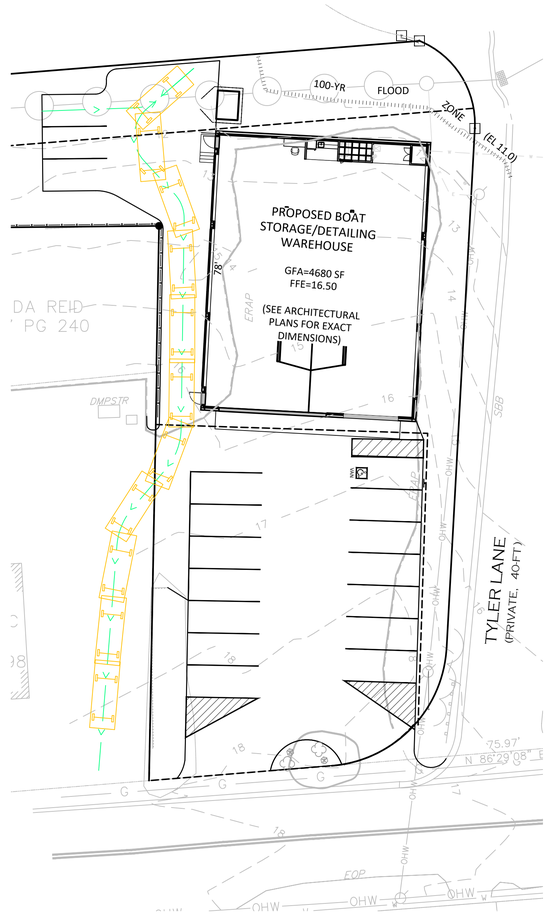


RESTAURANT EMPLOYEE EGRESS

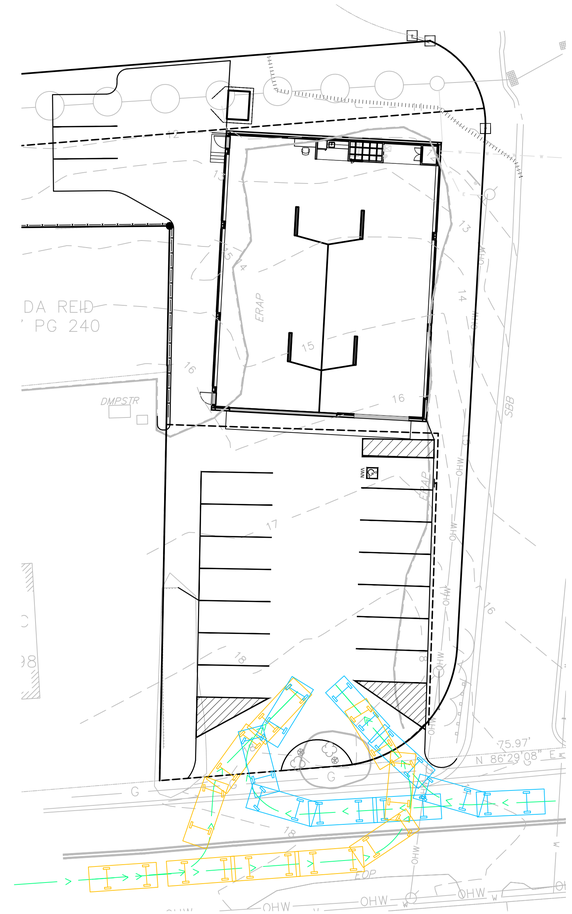


MAIN PARKING INGRESS

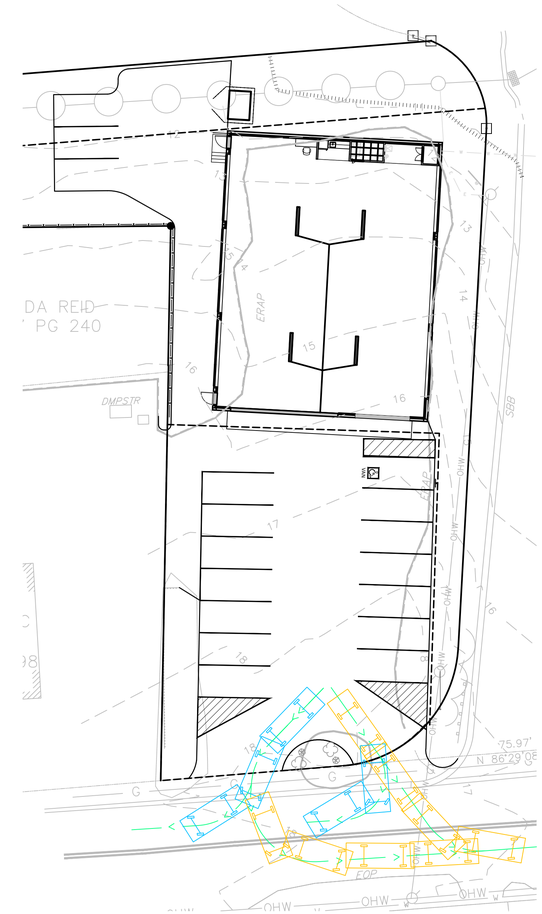


MAIN PARKING EGRESS

TRAFFIC/PARKING NOTES:

1. HISTORICALLY, THE VILLA ROMA (RESTAURANT) HAS BEEN USING THE GRAVEL AREA ON THIS PARCEL FOR NON-STRUCTURED PARKING. THE INTENT OF THIS PARKING PLAN IS TO ALLOW FOR CONTINUED/SHARED USE IN A MORE FORMALIZED SETTING.
2. OPERATIONALLY, THE MAIN PARKING LOT WILL BE SHARED BY THE APPLICANT AND THE RESTAURANT. THE APPLICANT WILL UTILIZE THE MAIN PARKING FROM 1AM TO 5PM. THE RESTAURANT WILL HAVE EXCLUSIVE USE OF THE MAIN PARKING LOT FROM 5PM TO 1AM.
3. THE THREE (3) SPOTS DESIGNATED AT THE REAR OF THE PROPERTY ARE INTENDED FOR RESTAURANT EMPLOYEE DAYTIME PARKING (1AM TO 5PM).

**NOT FOR CONSTRUCTION**

0 20 40 60 80

DRAWING SCALE: 1" = 20'

GENCON
323 Manley Street
W. Bridgewater, MA
www.GenConDB.com

Green Seal Environmental, Inc.
114 State Road, Building B
Sagamore Beach, MA 02562
Tel: (508) 888-6034 www.gseenv.com

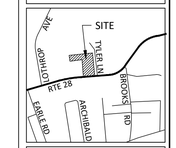


| No. | Date | Description |
|---|---|---|
| 2 | 1/8/21 | PB Comments |
| 1 | 12/10/20 | ZBA Comments |

owner
**ALLEN HARBOR MARINE**
335 LOWER COUNTY RD, HARWICH PORT , MA

project
**ALLEN HARBOR MARINE BLDG**
282 ROUTE 28, HARWICH PORT, MA

COMMONWEALTH OF MASSACHUSETTS
STUART D. CLARK
CIVIL
No. 40697
REGISTERED PROFESSIONAL ENGINEER

| | |
|---|---|
| scale | 1"=20' |
| date | December 17, 2020 |
| project | 20458 |
| drawn by | SDC/NHE |
| checked by | SDC |

TRAFFIC CIRCULATION PLAN

**C-06**

S:\CLIENTS\GENCON CONSTRUCTION, LLC\CELL-2020-001 (HARWICH)\CAD\DRFTG 2\TWO\8/8/2021 2:13 PM

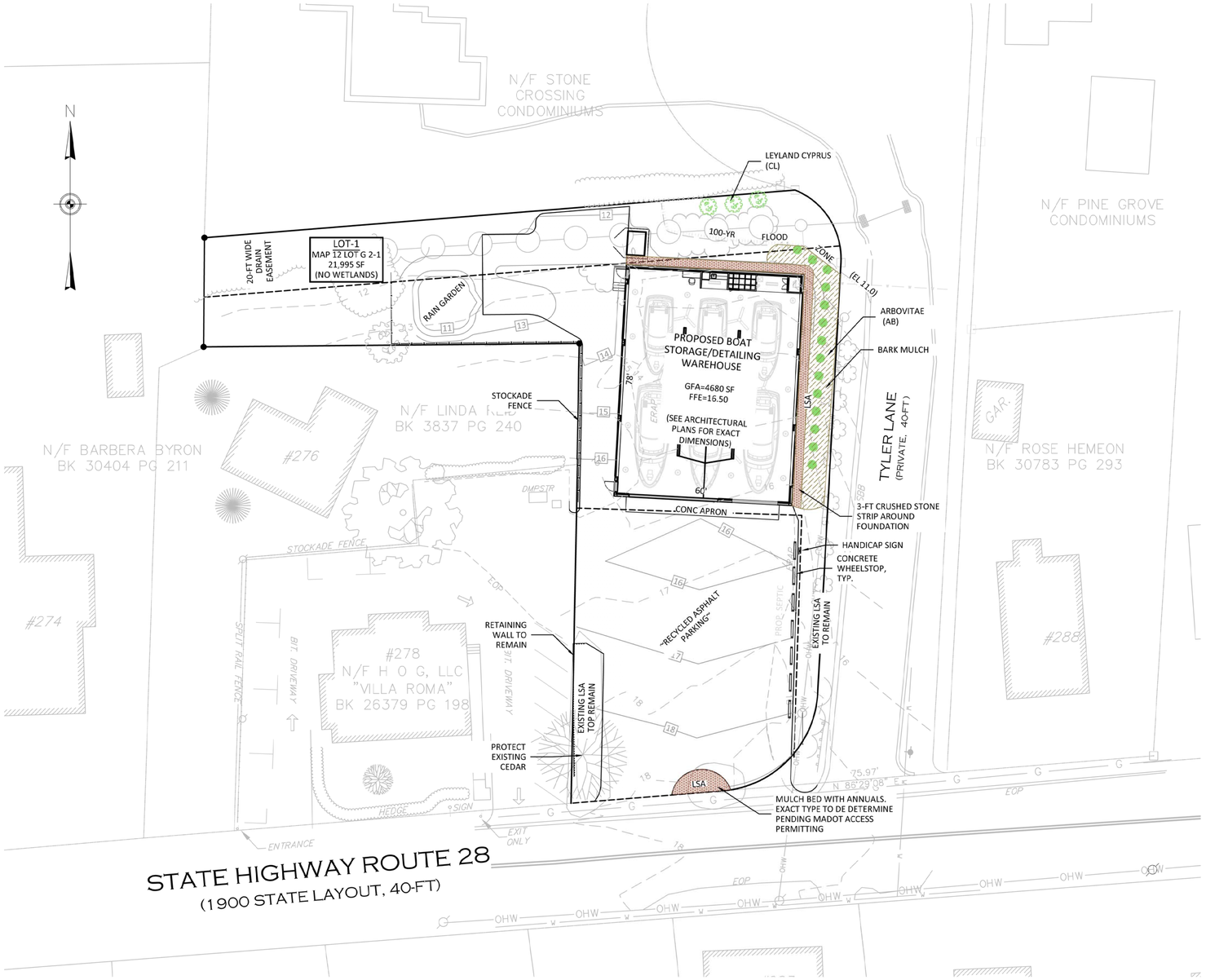


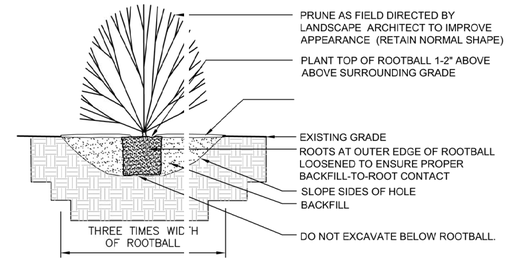


## SHRUB PLANTING DETAIL

NOT TO SCAL

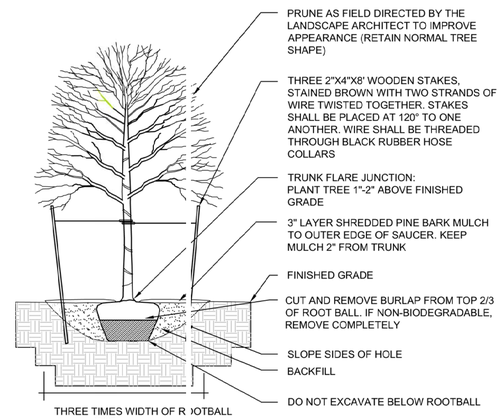


## TREE PLANTING DETAIL

NOT TO SCALE

LANDSCAPE NOTES

1. UNLESS OTHERWISE NOTED, ALL EXISTING TREES AND OTHER PLANT MATERIAL TO BE PROTECTED FOR THE DURATION OF THE PROJECT.
2. PRIOR TO THE PRE–CONSTRUCTION MEETING, CONTRACTOR SHALL CALL "DIG–SAFE" TO HAVE EXISTING UTILITIES MARKED. CONTRACTOR SHALL MAINTAIN MARKINGS FOR THE DURATION OF THE PROJECT.
3. REFER TO ENGINEERING PLANS FOR ALL GRADING, DRAINAGE, AND ADDITIONAL MATERIALS AND LAYOUT INFORMATION.
4. THE CONTRACTOR SHALL SUPPLY ALL PLANT MATERIAL IN QUANTITIES SUFFICIENT TO COMPLETE THE PLANTING PLAN AS SHOWN ON THE PLANS.
5. ALL PLANT MATERIAL TO CONFORM TO THE GUIDELINES ESTABLISHED BY "THE AMERICAN STANDARD FOR NURSERY STOCK" PUBLISHED BY THE AMERICAN ASSOCIATION OF NURSERYMEN, INC. ANSI Z60.1 –LATEST EDITION.
6. ALL PLANT MATERIAL TO BE APPROVED BY THE LANDSCAPE ARCHITECT. SUBSTITUTIONS ARE NOT ALLOWED WITHOUT WRITTEN APPROVAL FROM LANDSCAPE ARCHITECT.
7. STAKE LOCATIONS OF PLANT MATERIAL FOR APPROVAL BY LANDSCAPE ARCHITECT PRIOR TO COMMENCEMENT OF WORK. LANDSCAPE ARCHITECT MAY ADJUST PLANT LOCATIONS IN THE FIELD PRIOR TO PLANTING.
8. ALL MULCH BEDS SHALL CONSIST OF A 3" LAYER SCREENED LOAM, AND A 3" LAYER SHREDDED PINE BARK MULCH.
9. EDGE OF MULCH BEDS TO BE MECHANICALLY EDGED.
10. ALL TREES ADJACENT TO PEDESTRIAN AREAS SHALL NOT HAVE BRANCHING THAT EXTENDS INTO WALKWAYS.
11. ALL DISTURBED AREAS NOT SHOWN AS PAVEMENT, MULCH BEDS, OR OTHER SPECIFIED MATERIAL SHALL RECEIVE A MINIMUM 4" LAYER OF LOAM AND SEED.
12. LANDSCAPE CONTRACTOR TO GUARANTEE ALL PLANT MATERIAL FOR ONE FULL YEAR FROM DATE OF ACCEPTANCE.
13. CONTRACTOR SHALL REPAIR OR REPLACE ANY MATERIALS DAMAGED DURING CONSTRUCTION PRIOR TO FINAL ACCEPTANCE.
14. CONTRACTOR TO SUBMIT A WATERING SCHEDULE FOR THE SIXTY DAY MAINTENANCE PERIOD FOR REVIEW BY THE LANDSCAPE ARCHITECT AND OWNER FOR ALL PROPOSED PLANT MATERIAL.
15. SEE LANDSCAPE DETAILS FOR PLANTING INFORMATION.
16. IN THE EVENT OF A DISCREPANCY BETWEEN THE PLANT QUANTITIES SHOWN ON THE PLAN AND IN THE PLANT SCHEDULE, THE QUANTITY SHOWN ON THE PLAN SHALL TAKE PRECEDENCE. CONTRACTOR TO NOTIFY LANDSCAPE ARCHITECT IF ANY DISCREPANCY OCCURS

PINE BARK MULCH SURFACE TREATMENT

CHUSHED STONE SURFACE TREATMENT

PLANT SCHEDULE

| SYM | KEY | BOTANICAL NAME | COMMON NAME | SIZE | ROOT | QTY | NOTES |
|---|---|---|---|---|---|---|---|
| TREES | | | | | | | |
| | CL | Cupressocyparis leylandii | LEYLAND CYPRUS | 12–14' | BB | 3 | 8–FT O.C. |
| | AB | Thuja occidentalis | EMERALD GREEN ARBOVITAE | 5–6' | 15 GAL | 14 | 6–FT O.C. |

**NOT FOR CONSTRUCTION**

0 20 0 60 80

DRAWING SCALE: 1" = 20'

GenCon
323 Manley Street
W. Bridgewater, MA
www.GenConDB.com

Green Seal Environmental, Inc.
114 State Road, Building B
Sagamore Beach, MA 02562
Tel: (508) 888-6034 www.gseenv.com

| No. | Date | Description |
|---|---|---|
| 3 | 1/27/21 | PB Comments |
| 2 | 1/8/21 | PB Comments |
| 1 | 12/10/20 | ZBA Comments |

owner
**ALLEN HARBOR MARINE**
335 LOWER COUNTY RD, HARWICH PORT , MA

project
**ALLEN HARBOR MARINE BLDG**
282 ROUTE 28, HARWICH PORT, MA

COMMONWEALTH OF MASSACHUSETTS
STUART D. CLARK
CIVIL
No. 40697
REGISTERED PROFESSIONAL ENGINEER

scale 1"=20'
date December 17, 2020
project 20458
drawn by SDC/NHE
checked by SDC

LANDSCAPE PLAN

**C-07**

S:\CLIENTS\GENCRON CONSTRUCTION, LLC\CCL-2020-0001 (HARWICH)\CAD\BPPR-3.DWG1/27/2021 11:36 AM

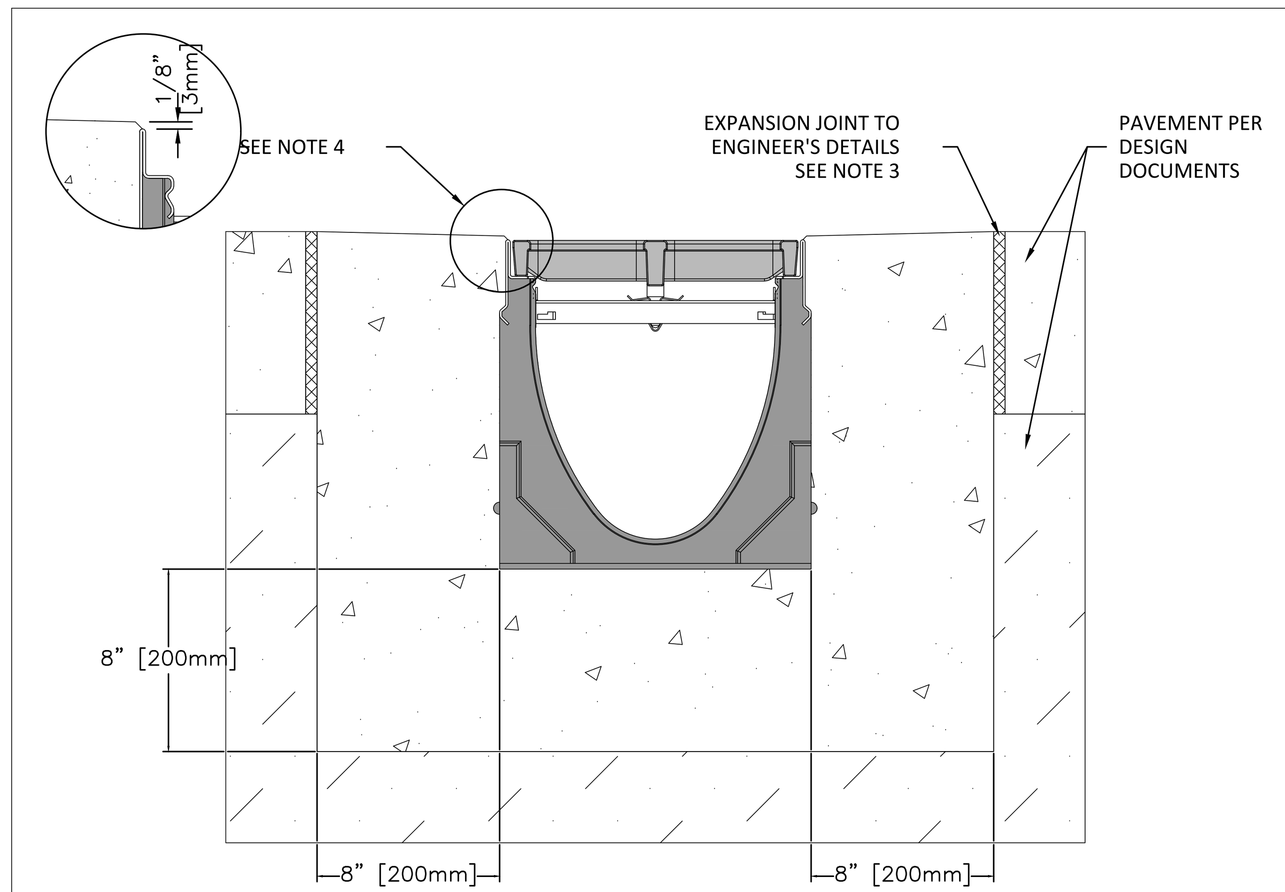


NOTES:
1. IT IS NECESSARY TO ENSURE MINIMUM DIMENSIONS SHOWN ARE SUITABLE FOR EXISTING GROUND CONDITIONS. *ENGINEERING ADVICE MAY BE REQUIRED.*
2. MINIMUM CONCRETE STRENGTH OF 4,000 PSI IS RECOMMENDED. CONCRETE SHOULD BE VIBRATED TO ELIMINATE AIR POCKETS.
3. EXPANSION AND CONTRACTION CONTROL JOINTS AND REINFORCEMENT ARE RECOMMENDED TO PROTECT CHANNEL AND CONCRETE SURROUND. *ENGINEERING ADVICE MAY BE REQUIRED.*
4. THE FINISHED LEVEL OF THE CONCRETE SURROUND MUST BE APPROX. 1/8" [3mm] ABOVE THE TOP OF THE CHANNEL EDGE.
5. CONCRETE BASE THICKNESS SHOULD MATCH SLAB THICKNESS. ENGINEERING ADVICE MAY BE REQUIRED TO DETERMINE PROPER LOAD CLASS.
6. REFER TO ACO'S LATEST INSTALLATION INSTRUCTIONS FOR FURTHER DETAILS.

**SPECIFICATION CLAUSE**

**K200 KLASSIKDRAIN - LOAD CLASS C**

*GENERAL*
THE SURFACE DRAINAGE SYSTEM SHALL BE POLYMER CONCRETE K200 CHANNEL SYSTEM WITH GALVANIZED STEEL EDGE RAILS AS MANUFACTURED BY ACO POLYMER PRODUCTS, INC.

*MATERIALS*
CHANNELS SHALL BE MANUFACTURED FROM POLYESTER RESIN POLYMER CONCRETE WITH AN INTEGRALLY CAST-IN GALVANIZED STEEL EDGE RAIL. MINIMUM PROPERTIES OF POLYMER CONCRETE WILL BE AS FOLLOWS:

| | |
|---|---|
| COMPRESSIVE STRENGTH: | 14,000 PSI |
| FLEXURAL STRENGTH: | 4,000 PSI |
| TENSILE STRENGTH: | 1,500 PSI |
| WATER ABSORPTION: | 0.07% |
| FROST PROOF | YES |
| DILUTE ACID AND ALKALI RESISTANT | YES |
| B117 SALT SPRAY TEST COMPLIANT | YES |

THE SYSTEM SHALL BE 8" (200mm) NOMINAL INTERNAL WIDTH WITH A 10.2" (260mm) OVERALL WIDTH AND A BUILT-IN SLOPE OF 0.5%. CHANNEL INVERT SHALL HAVE DEVELOPED "V" SHAPE. ALL CHANNELS SHALL BE INTERLOCKING WITH A MALE/FEMALE JOINT.

THE COMPLETE DRAINAGE SYSTEM SHALL BE BY ACO POLYMER PRODUCTS, INC. ANY DEVIATION OR PARTIAL SYSTEM DESIGN AND/OR IMPROPER INSTALLATION WILL VOID ANY AND ALL WARRANTIES PROVIDED BY ACO POLYMER PRODUCTS, INC.

CHANNEL SHALL WITHSTAND LOADING TO PROPER LOAD CLASS AS OUTLINED BY EN 1433. GRATE TYPE SHALL BE APPROPRIATE TO MEET THE SYSTEM LOAD CLASS SPECIFIED AND INTENDED APPLICATION. GRATES SHALL BE SECURED USING 'QUICKLOK' BOLTLESS LOCKING SYSTEM. CHANNEL AND GRATE SHALL BE CERTIFIED TO MEET THE SPECIFIED EN 1433 LOAD CLASS. THE SYSTEM SHALL BE INSTALLED IN ACCORDANCE WITH THE MANUFACTURER'S INSTRUCTIONS AND RECOMMENDATIONS.

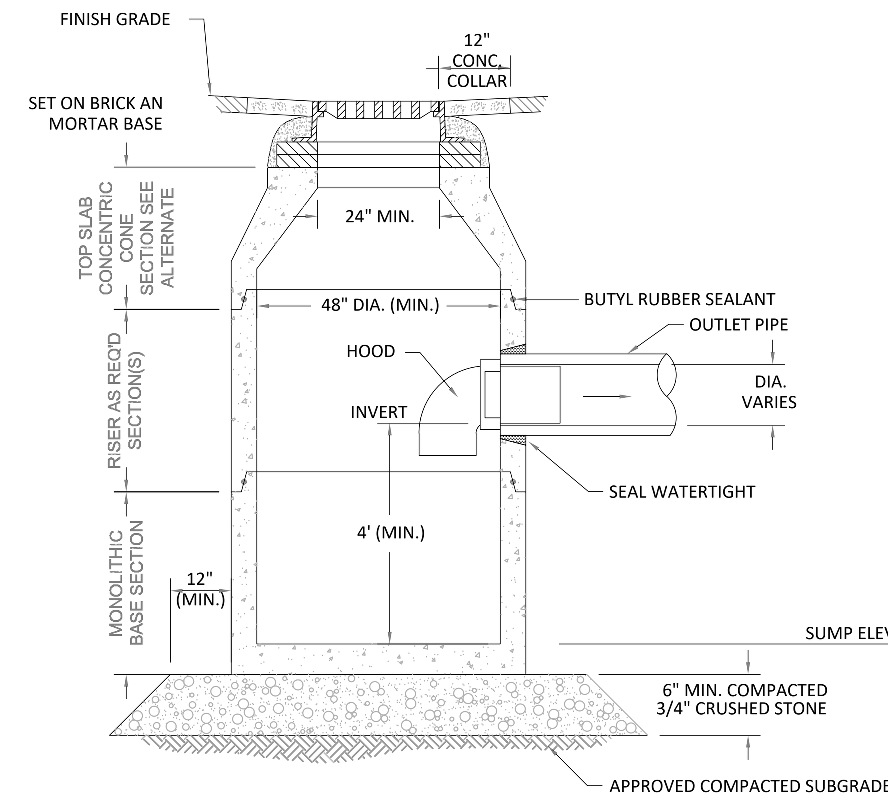


## DEEP SUMP HOODED CATCH BASIN

NOT TO SCALE

NOTES:
1) CONCRETE STRENGTH 4,000 PSI @ 28 DAYS.
2) CEMENT: PORTLAND TYPE II PER ASTM C150.
3) STEEL REINFORCING: ASTM A-615, Grade 60.
4) DESIGN LOAD: AASHTO HS-20.
5) USE ECCENTRIC FLAT TOP WITH 24" OPENING WHERE DEPTH TO INVERT IS LESS THAN 5-FT.
6) STRUCTURE IS TO BE SET ON WELL COMPACTED 12" BED OF CRUSHED STONE.

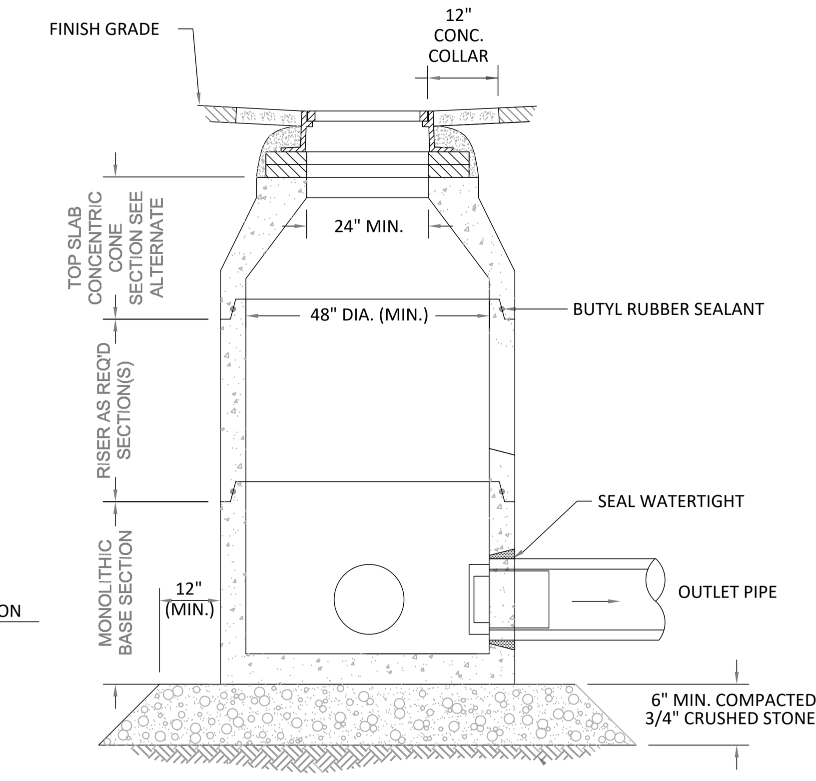


## DRAIN MANHOLE

NOT TO SCALE

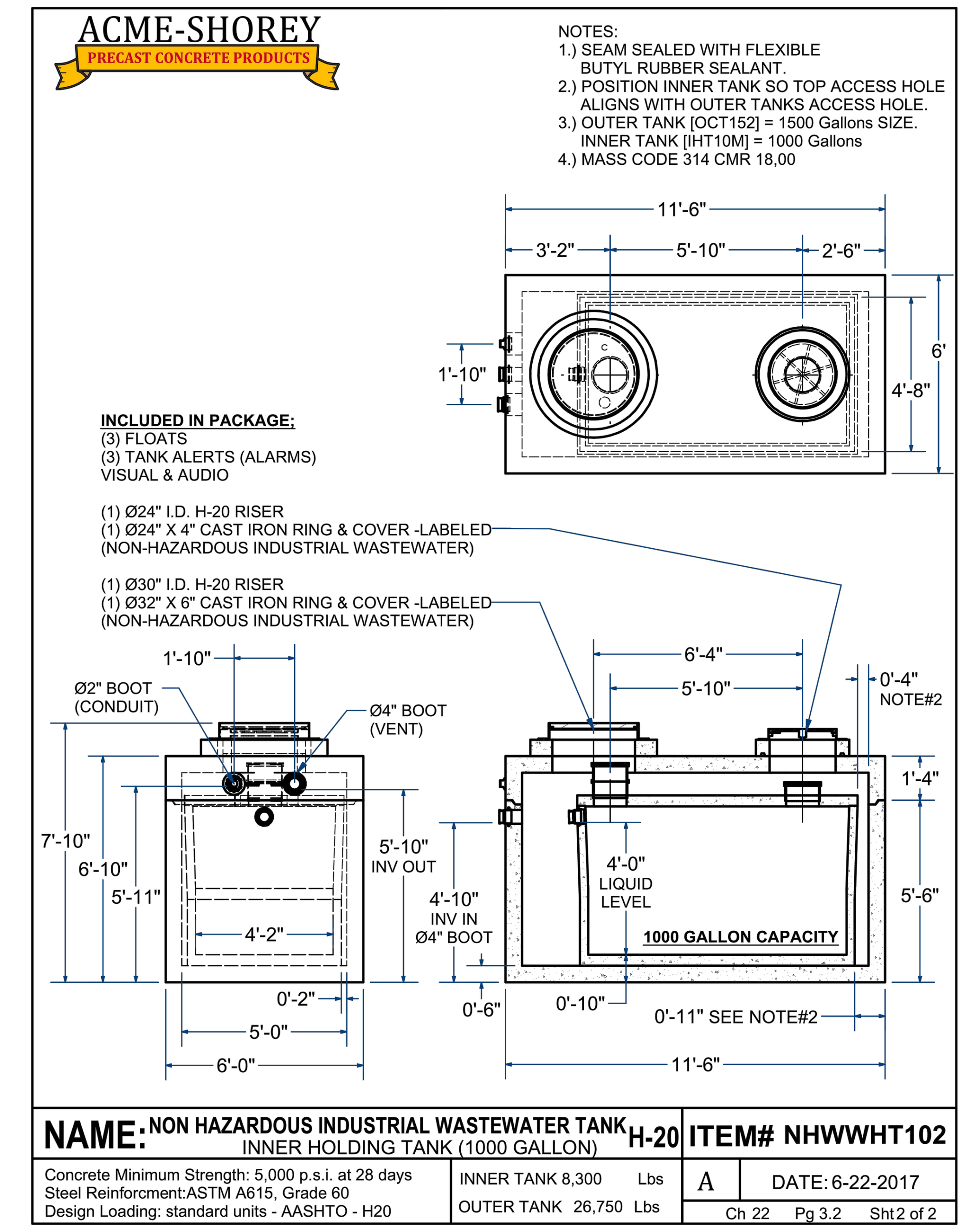


## NHWWH TANK

NOT TO SCALE

NOTES:
1. NON HAZARDOUS INDUSTRIAL WASTE WATER HOLDING (NHIWWH) TANKS SHALL CONFORM TO MGL 314 CMR 18.00 AND SPECIFICALLY 18.08.
2. NHIWH TANKS SHALL HAVE AN H-20 LOAD RATING.

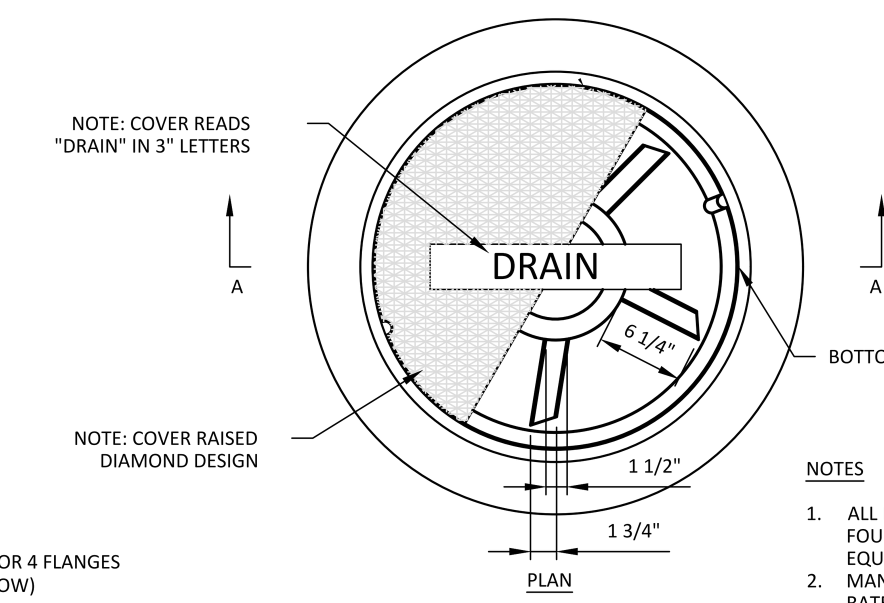


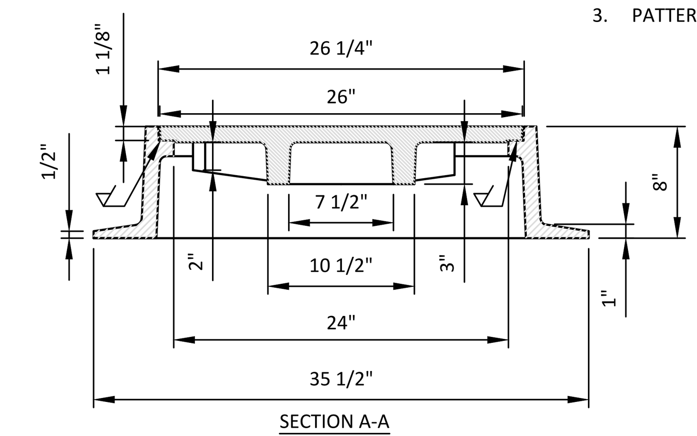


## MANHOLE FRAME AND COVER DETAIL

NOT TO SCALE

NOTES
1. ALL DMH FRAME AND COVERS TO BE LEBARON FOUNDRY MODEL NO. LK110A DRAIN OR EQUAL.
2. MANHOLE FRAME AND COVER TO BE H-20 LOAD RATED.
3. PATTERN NO.S LK110A/L26C2.

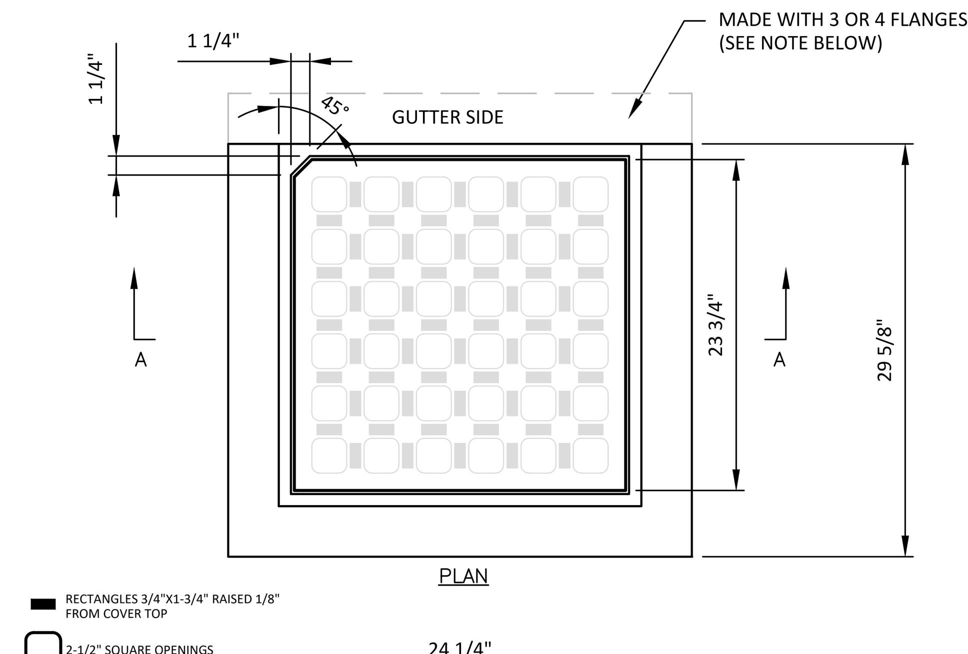


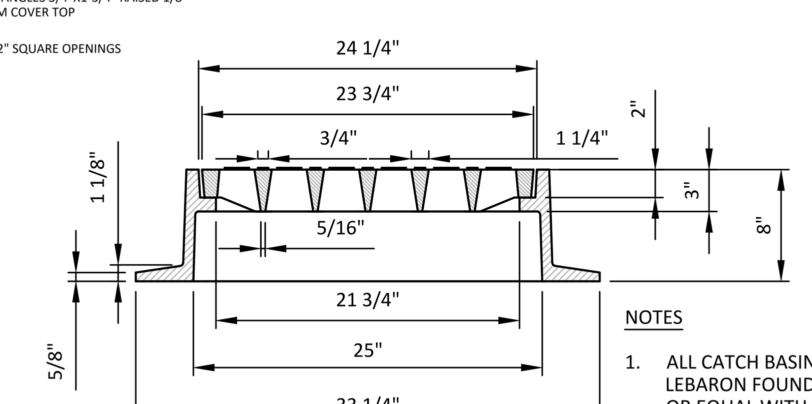


NOTES
1. ALL CATCH BASIN FRAME AND GRATES TO BE LEBARON FOUNDRY MODEL NO. LF 246 DRAIN OR EQUAL WITH 4 FLANGES UNLESS OTHERWISE SPECIFIED ON THE CONTRACT DRAWINGS.

## CATCH BASIN FRAME AND GRATE DETAIL

NOT TO SCALE

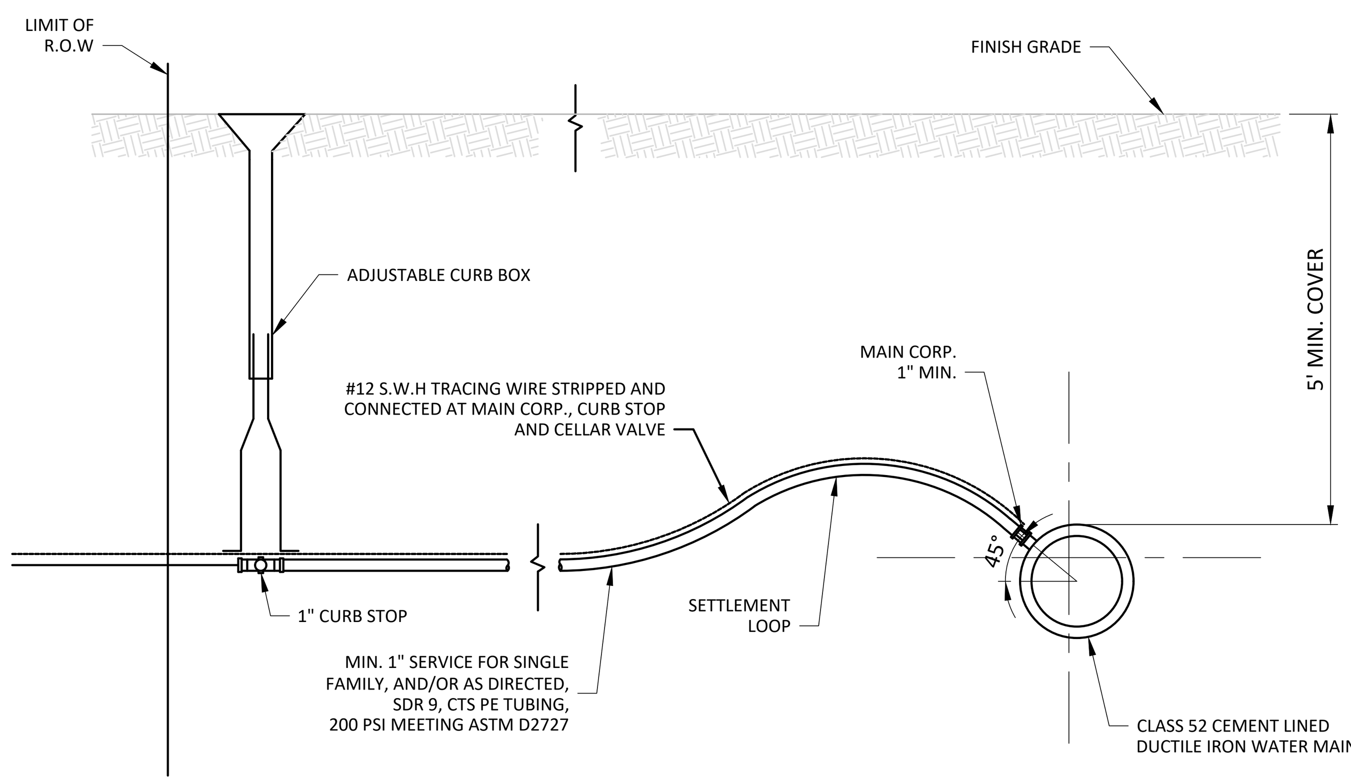


## TYPICAL WATER SERVICE CONNECTION DETAIL

NOT TO SCALE

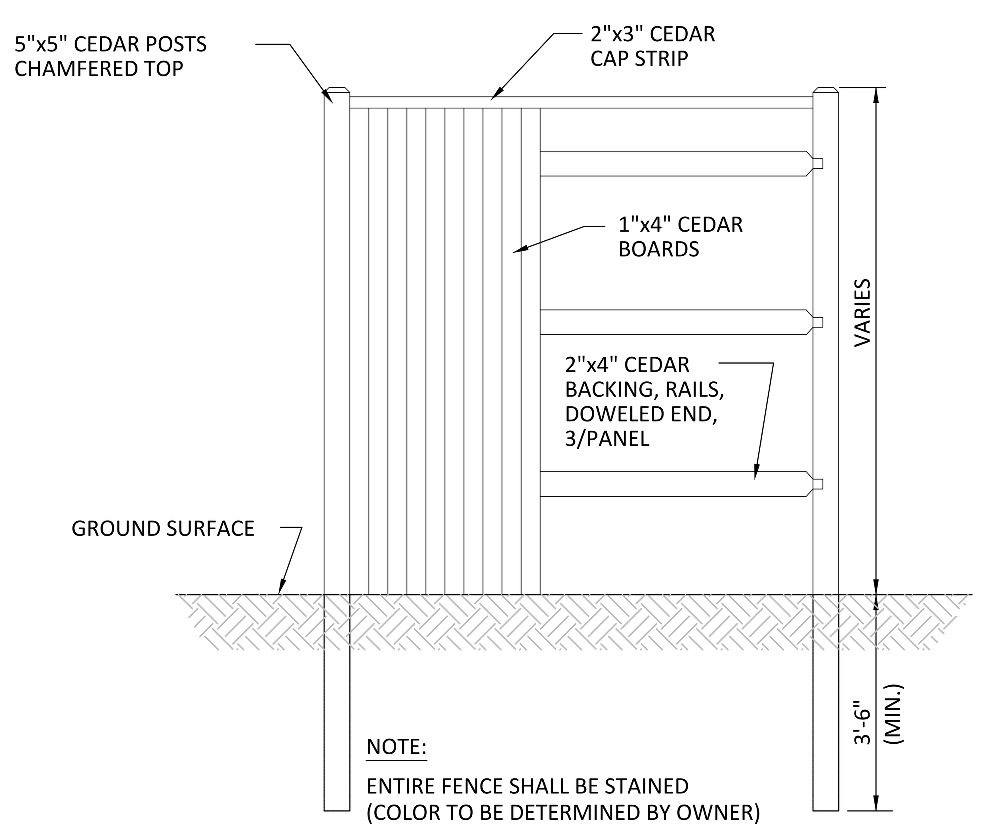


## STOCKADE FENCE DETAIL

NOT TO SCALE

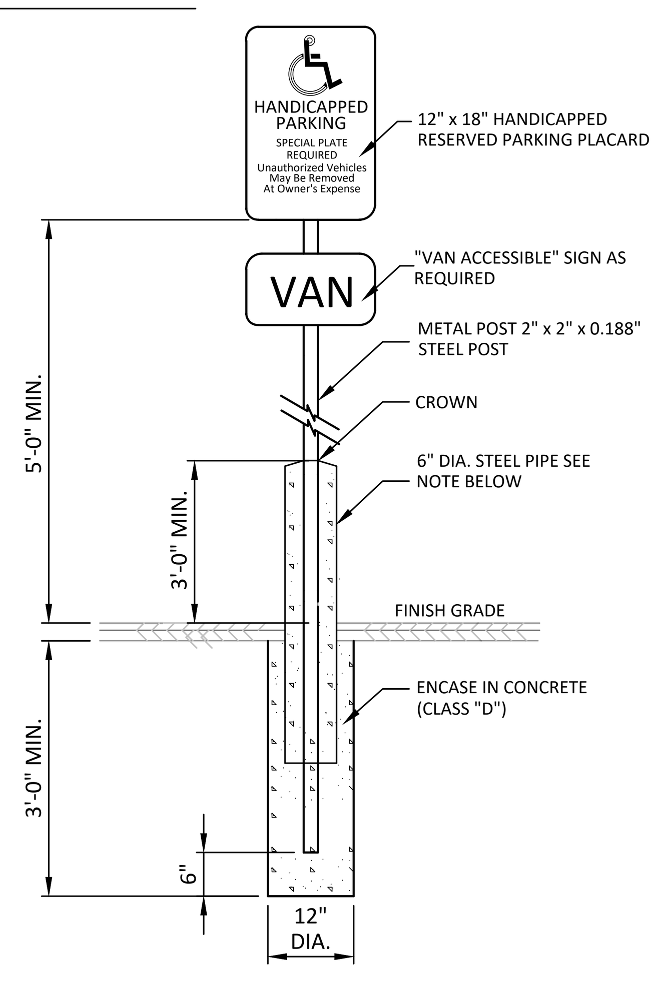


## HANDICAP SIGN DETAIL

NOT TO SCALE

NOTES:
1. SIGN LAYOUT, COLORS, SYMBOL AND LETTERING SHALL BE AASHTO STANDARD.
2. TO BE LOCATED ON SITE AT ALL HANDICAP SPACES AS SHOWN ON PLAN.
3. METAL POST SHALL BE MANUFACTURER PAINTED WITH EXTERIOR BLACK ENAMEL OR APPROVED EQUAL.
4. STEEL PIPE TO BE USED WHERE SIGN IS INSTALLED IN PAVED AREA.

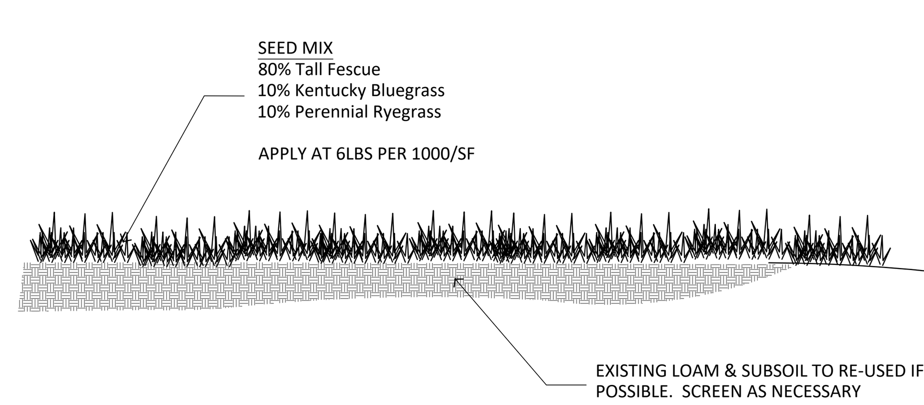


## LOAM AND SEED DETAIL

NOT TO SCALE

NOTES:
1. ALL DISTURBED NON PAVED AREAS TO RECEIVE LOAM AND SEED UNLESS OTHERWISE NOTED.
2. EROSION CONTROL BLANKET SHALL BE USED ON ALL DISTURBED SLOPES GREATER THAN 2H:1V

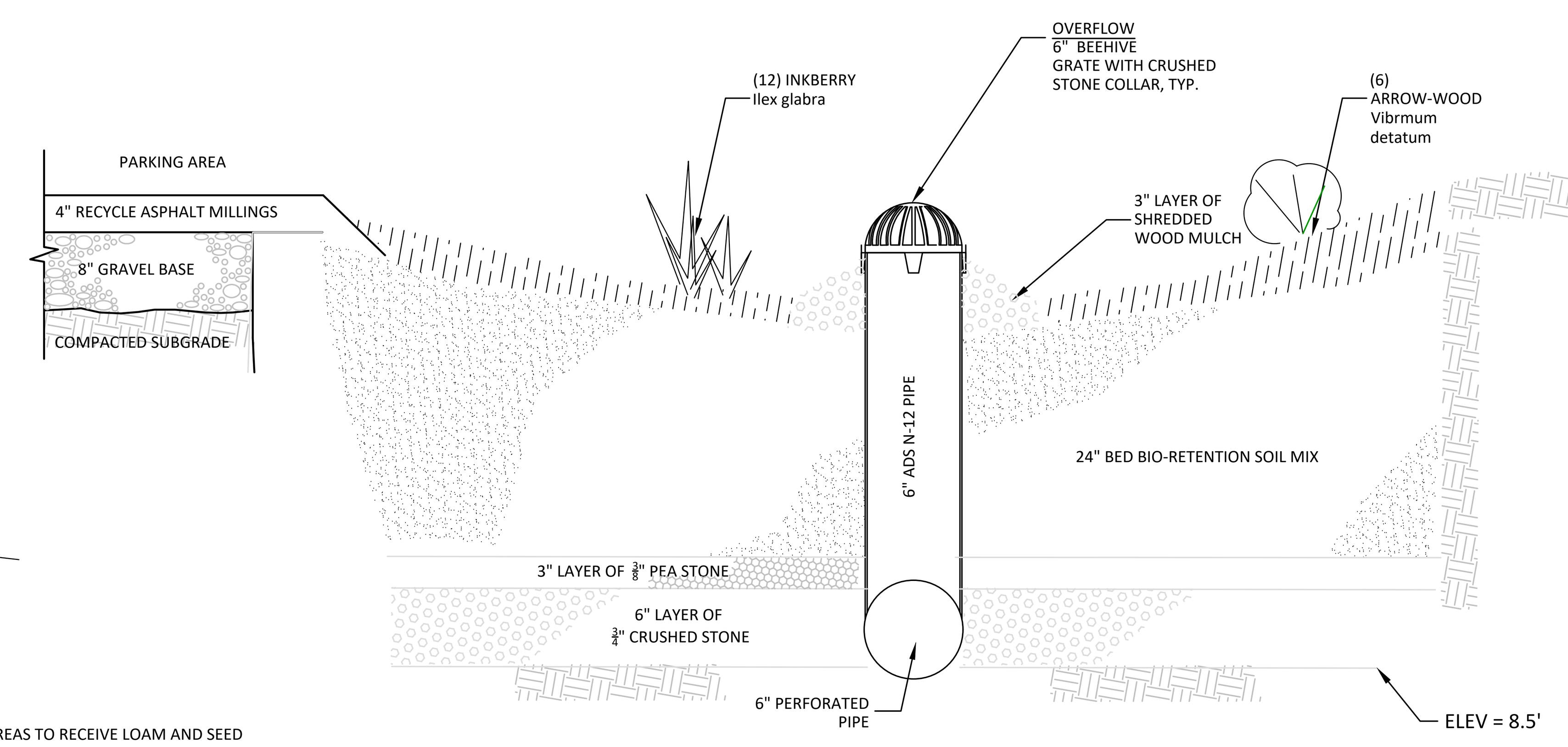


## RAIN GARDEN DETAIL

NOT TO SCALE

**NOT FOR CONSTRUCTION**

GENCON
323 Manley Street
W. Bridgewater, MA
www.GenConDB.com

Green Seal Environmental, Inc.
114 State Road, Building B
Sagamore Beach, MA 02562
Tel: (508) 888-6034 www.gseenv.com

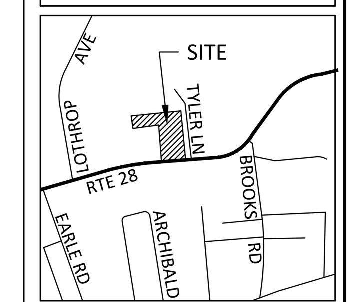


| No. | Date | Description |
|---|---|---|
| 2 | 1/8/21 | PB Comments |
| 1 | 12/10/20 | ZBA Comments |

DISCLAIMER

APPLICANT
**ALLEN HARBOR MARINE**
335 LOWER COUNTY RD, HARWICH PORT , MA

project
**ALLEN HARBOR MARINE BLDG**
282 ROUTE 28, HARWICH PORT, MA

COMMONWEALTH OF MASSACHUSETTS
STUART D. CLARK
CIVIL
No. 40697
REGISTERED PROFESSIONAL ENGINEER

| | |
|---|---|
| scale | AS NOTED |
| date | December 17, 2020 |
| project | 20458 |
| drawn by | SDC/NHE |
| checked by | SDC |

DETAILS

**D-00**

S:\CLIENTS\GENDRON CONSTRUCTION, LLC\GCLL-2020-0001 (HARWICH)\CAD\BPP(R.2).DWG1/8/2021 2:13 PM

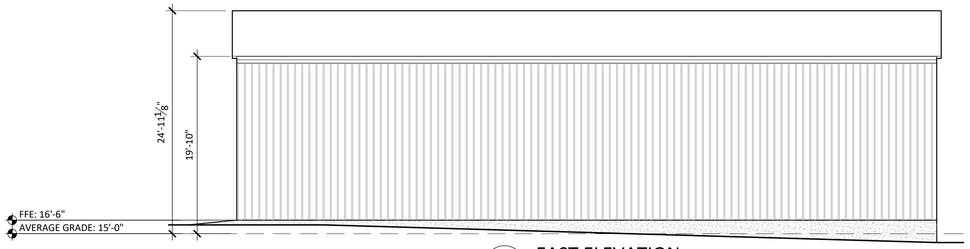


6 EAST ELEVATION

SCALE: 1/8"=1'-0"

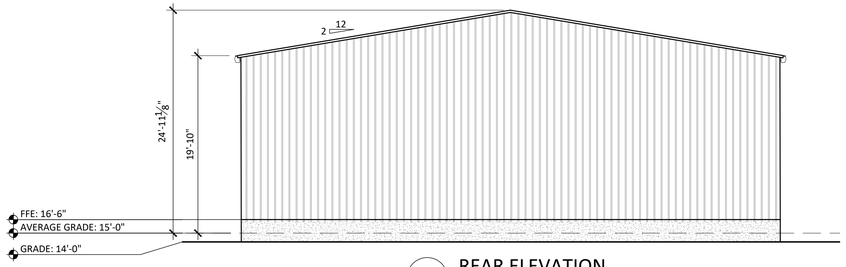


5 REAR ELEVATION

SCALE: 1/8"=1'-0"

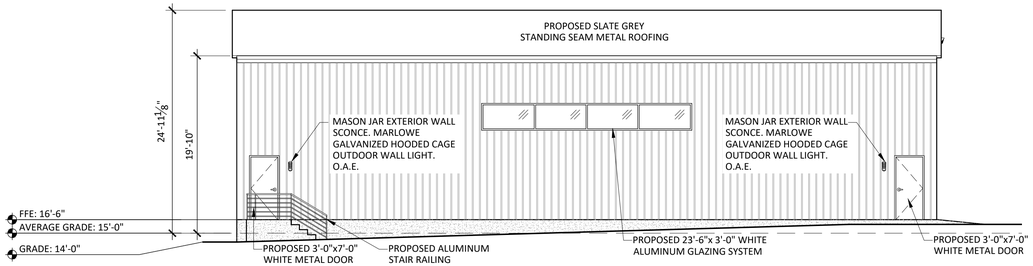


4 WEST ELEVATION

SCALE: 1/8"=1'-0"

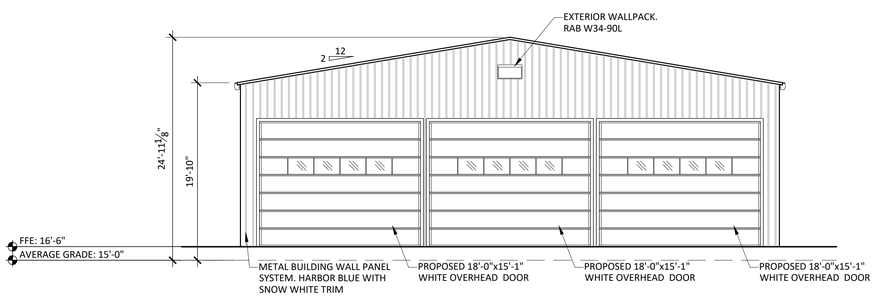


3 SOUTH ELEVATION

SCALE: 1/8"=1'-0"

## SYMBOL LEGEND

- NEW WALL CONSTRUCTION.
- EXISTING WALL CONSTRUCTION
- NEW DOOR AND FRAME.
- ELEV.= ELEVATION TAG/ FINISH FLOOR ELEVATION
- WINDOW, CURTAIN WALL OR STOREFRONT ASSEMBLY.
- ELEVATION SYMBOL: ELEVATION/SHEET NO.
- DETAIL SYMBOL: DETAIL NO./SHEET NO.
- SECTION MARK: SECTION NO./SHEET NO.

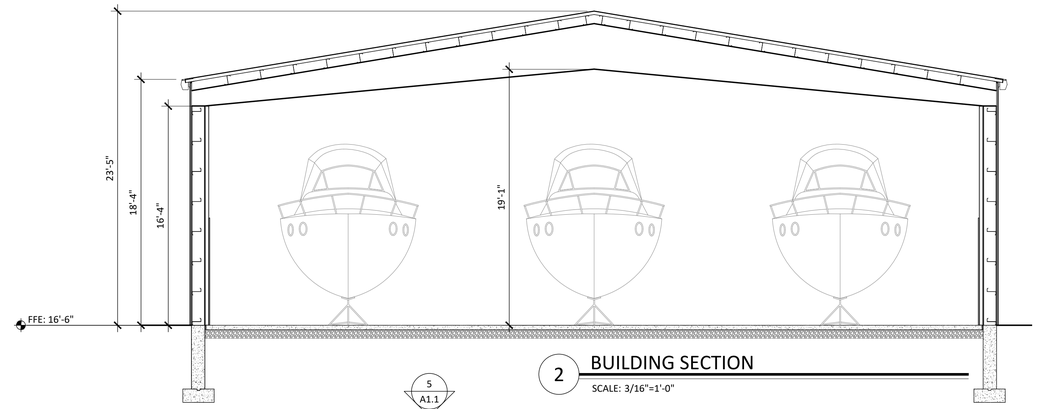


2 BUILDING SECTION

SCALE: 3/16"=1'-0"

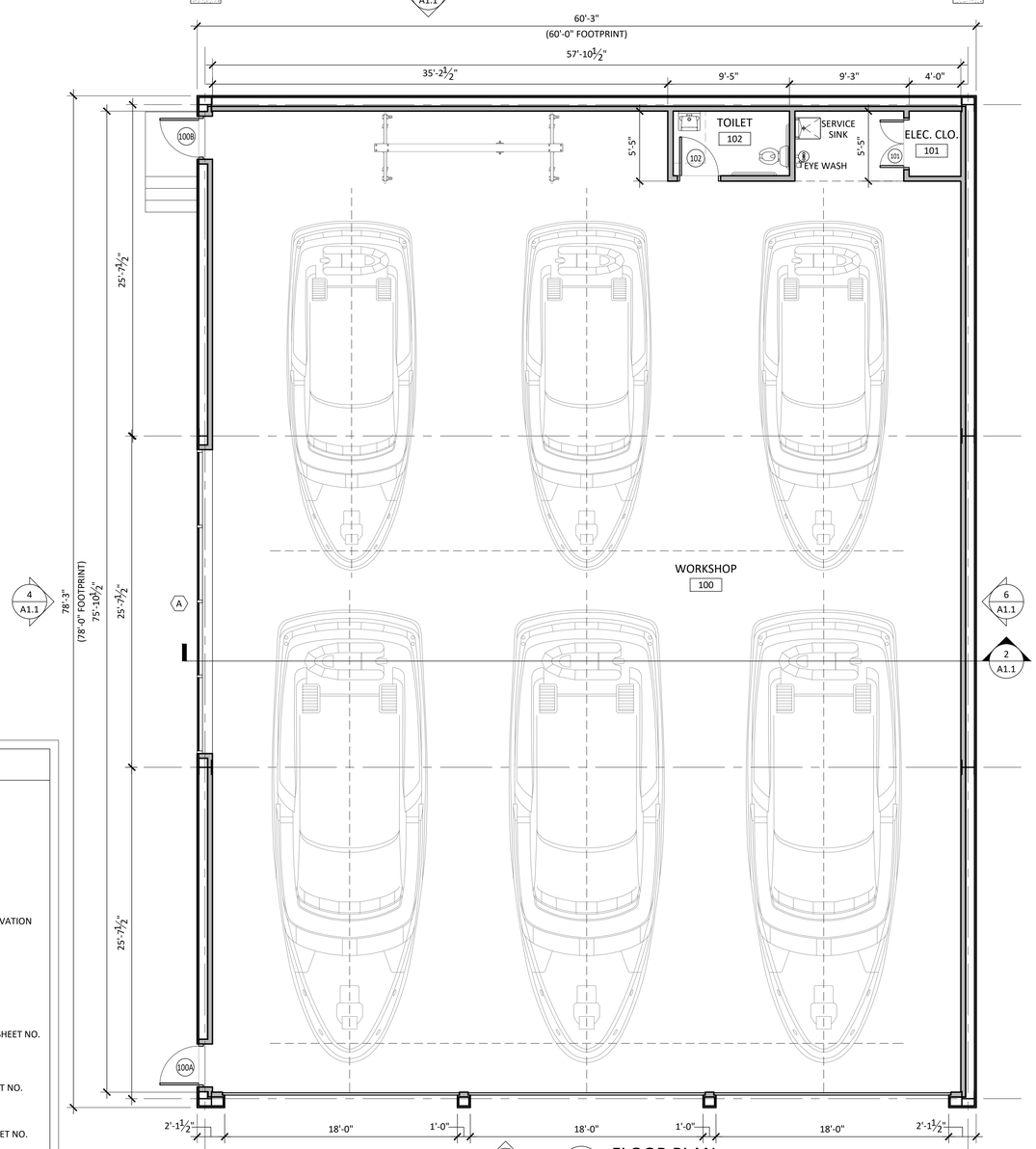


1 FLOOR PLAN

SCALE: 3/16"=1'-0"

GENCON

323 Manley Street
W. Bridgewater, MA
www.GenConDB.com

The copied, disclosed to others, or used in connection with any work or project, other than the specified project for which they have been prepared and developed, without the express knowledge and written consent of Gendron Construction, LLC.

| No. | Date | Description |
|---|---|---|

owner
**ALLEN HARBOR MARINE**
335 LOWER COUNTY RD, HARWICH PORT, MA

project
**ALLEN HARBOR MARINE BLDG**
286 MA-28, HARWICH PORT, MA

scale **AS NOTED**
date **1/27/21**
project **20458**
drawn by **NK**
checked by **SM**

**FLOOR PLAN, SECTION & ELEVATIONS**

**A1.1**

Copyright © 2021 by Gendron Construction, LLC. The architectural plans, drawings, designs, specifications and other arrangements on this sheet are and shall remain the property of Gendron Construction, LLC. No part thereof shall be copied, disclosed

GENSERV
Interiors | Special Projects

Harwich Planning Department
Ms. Charleen Greenlagh
732 Main Street Harwich, MA
Attn: Ms. Greenlagh

RE: PB-2002-34 – Exterior Light Fixtures

Ms. Greenlagh,

The following light fixtures are being proposed for the exterior of the building.

1) RAB Lighting- 90L fixture is for the front peak of the building.
2) John Timberland /Marlowe 13 1/4"H Galvanized Hooded Cage Outdoor Wall Light- One (1) of these fixture at each egress on the West elevation.

Please contact me if you have any questions.

Thank you,

R O'Neill

Rob O'Neill
Project Manager

323 Manley Street • West Bridgewater, MA 02739 • www.gencondb.com • (O) 508.580.4626 • (F) 508.580.4266

# Ultra economy that gets the job done right.

W34™

At RAB, lowest price still means highest standards.

RAB® | Outdoor

# W34™

- Available in 6 lumen packages
  *(replaces up to 400W MH; see performance on back page)*:
  Small – 3,100 lm and 3,600 lm
  Medium – 5,400 lm, 7,200 lm or 9,100 lm
  Large – 15,000 lm
- Integrated 0-10V dimming
- Available with photocell or microwave occupancy sensor
- Lightcloud®-enabled models offered
- 50,000-Hour LED lifespan

*RAB's warranty is subject to all terms and conditions found at rablighting.com/warranty.*

*Save even more with utility rebates. W34 models are DLC listed.*

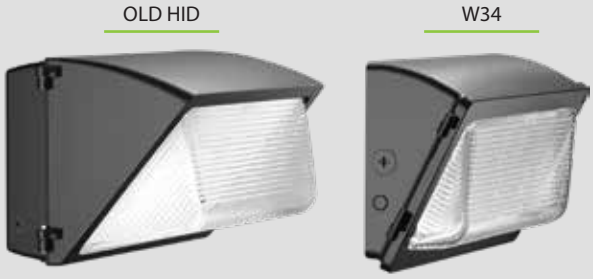


Same look from the front, same footprint on the back, drastically reduced depth and weight.

## Optimized to deliver value.

Products in the W34 family combine the open-face look of traditional wall packs with a cost-efficient design that streamlines the replacement cycle of outdated or inoperable fixtures. You get exactly what you need to get the job done right…all at a fantastic price point.

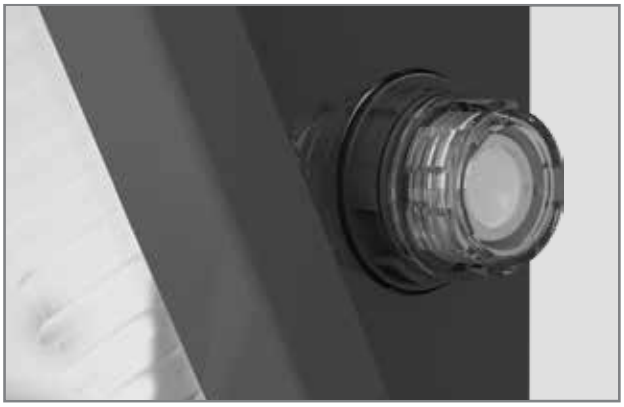

## Light and motion sensing.

Button photocell and microwave occupancy sensor accessories are available as factory-installed options to provide additional energy savings by turning lights on only when you need them.

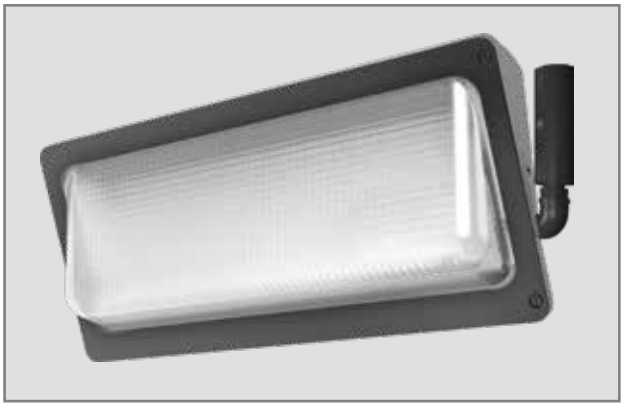

## Simple, powerful lighting control.

All models are available with factory-installed Lightcloud integration, for use with our commercial, wireless lighting control system and service.

## Specifications

**UL Listing:**
Suitable for wet locations. Suitable for mounting within 4 feet of the ground

**LEDs:**
Long-life, high-efficacy, surface-mount LEDs

**Lifespan:**
50,000-hour LED lifespan based on IES LM-80 and TM-21 calculations

**Drivers:**
**(30L):** Constant Current, Class 2, 120-277V, 50/60Hz, 120V: 0.24A, 208V: 0.15A, 240V: 0.13A, 277V: 0.12A
Constant Current, Class 2, 480V, 50/60Hz, 480V: 0.06A

**(35L):** Constant Current, Class 2, 120-277V, 50/60Hz, 120V: 0.28A, 208V: 0.17A, 240V: 0.15A, 277V: 0.13A
Constant Current, Class 2, 480V, 50/60Hz, 480V: 0.07A

**(55L):** Constant Current, Class 2, 120-277V, 50/60Hz, 120V: 0.43A, 208V: 0.26A, 240V: 0.22A, 277V: 0.19A
Constant Current, Class 2, 480V, 50/60Hz, 480V: 0.07A

**(70L):** Constant Current, Class 2, 120-277V, 50/60Hz, 20V: 0.58A, 208V: 0.35A, 240V: 0.30A, 277V: 0.26A
Constant Current, Class 2, 480V, 50/60Hz, 480V: 0.14A

**(90L):** Constant Current, Class 2, 120-277V, 50/60Hz, 120V: 0.73A, 208V: 0.43A, 240V: 0.38A, 277V: 0.33A
Constant Current, Class 2, 480V, 50/60Hz, 480V: 0.14A

**(150L):** Constant Current, Class 1, 120-277V, 50/60Hz, 120V: 1.14A, 208V: 0.69A, 240V: 0.60A, 277V: 0.52A
Constant Current, Class 2, 480V, 50/60Hz, 480V: 0.28A

**0-10V Dimming (Standard):**
Driver includes dimming control wiring for 0-10V dimming systems. Requires separate 0-10V DC dimming circuit. Dims as low as 10%.

**Color Uniformity:**
RAB's range of CCT (Correlated Color Temperature) follows the guidelines of the American National Standard for Specifications for the Chromaticity of Solid StateLighting (SSL) Products, ANSI C78.377-2017.

**Housing:**
Die-cast aluminum

**Lens:**
Glass

**Reflector:**
Specular aluminum

**Cold Weather Starting:**
Minimum starting temperature is -40°C (-40°F)

**Maximum Ambient Temperature:**
Suitable for use in 40°C (104°F)

**Mounting:**
Die-cast backbox with four (4) conduit entry points and knockout pattern for junction box or direct wall mounting. Hinged door for easy re-assembly.

**Green Technology:**
Mercury and UV free. RoHS-compliant components.

**Finish:**
Formulated for high durability and long-lasting color

**5 Yr Limited Warranty:**
The RAB 5-year, limited warranty covers light output, driver performance and paint finish. RAB's warranty is subject to all terms and conditions found at rablighting.com/warranty.

**Buy American Act Compliance:**
RAB values USA manufacturing! Upon request, RAB may be able to manufacture this product to be compliant with the Buy American Act (BAA). Please contact customer service to request a quote for the product to be made BAA compliant.

## Dimensions & Weights

**W34-30L/35L**
**Weight:** 6.8 lbs

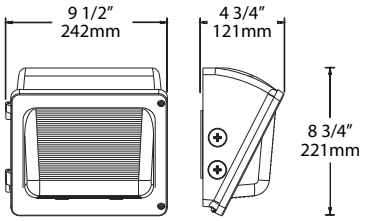


**W34-55L/70L/90L**
**Weight:** 10.8 lbs

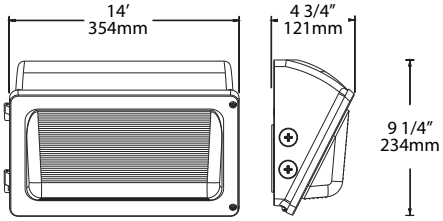


**W34-150L**
**Weight:** 13.3 lbs

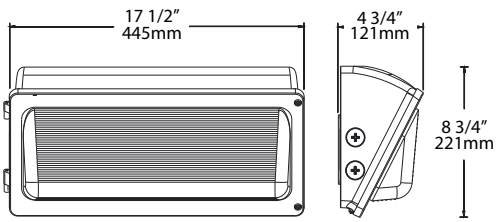

## Performance

### W34 Small

| | 3,100lm | | 3,600lm | |
|---|---|---|---|---|
| **Color Temperature** | **5000K** | **3000K** | **5000K** | **3000K** |
| **Input Watts** | 29 | 29 | 33 | 34 |
| **Output Lumens** | 3,105 | 3,044 | 3,601 | 3,529 |
| **Lumens Per Watt** | 107 | 105 | 109 | 105 |
| **Color Accuracy (CRI)** | 83 | 82 | 83 | 83 |
| | *(Replaces 70W MH)* | | *(Replaces 100W MH)* | |

### W34 Medium

| | 5,400lm | | 7,200lm | | 9,100lm | |
|---|---|---|---|---|---|---|
| **Color Temperature** | **5000K** | **3000K** | **5000K** | **3000K** | **5000K** | **3000K** |
| **Input Watts** | 51 | 51 | 70 | 70 | 87 | 87 |
| **Output Lumens** | 5,375 | 5,270 | 7,188 | 7,047 | 9,087 | 8,909 |
| **Lumens Per Watt** | 105 | 103 | 103 | 101 | 104 | 102 |
| **Color Accuracy (CRI)** | 83 | 82 | 83 | 82 | 83 | 82 |
| | *(Replaces 150W MH)* | | *(Replaces 200W MH)* | | *(Replaces 250 MH)* | |

### W34 Large

| | 15,000lm | |
|---|---|---|
| **Color Temperature** | **5000K** | **3000K** |
| **Input Watts** | 136 | 136 |
| **Output Lumens** | 14,845 | 14,554 |
| **Lumens Per Watt** | 109 | 107 |
| **Color Accuracy (CRI)** | 83 | 82 |
| | *(Replaces 400W MH)* | |

## Ordering information

| Family | | Lumen Package | | CRI/CCT | Voltage | Options |
|---|---|---|---|---|---|---|
| W34 | — | 90L | — | | | |

| Lumen Package | | CRI/CCT | | Voltage | | Options | |
|---|---|---|---|---|---|---|---|
| **30L** | 3100lm, 30W | **Blank** | 80 CRI, 5000K | **Blank** | 120-277V, 0-10V Dimming | **Blank** | No Option |
| **35L** | 3600lm, 33W | **830** | 80 CRI, 3000K | **/480** | 480V, 0-10V Dimming | **/PCU** | 120-277V Button Photocell |
| **55L** | 5400lm, 51W | | | | | **/MVS** | 120-277V Microwave Sensor |
| **70L** | 7200lm, 69W | | | | | **/LC** | 120-277V Lightcloud® Control |
| **90L** | 9100lm, 87W | | | | | | |
| **150L** | 15000lm, 136W | | | | | | |

# Need premium wall packs?

For twice the lifespan, more variety and a no-compromise warranty, check out our WP1/WP2/WP3 series of traditional, glass-front LED wall packs.

**FREE SHIPPING** on Most Orders*

OPEN BOX STORES INSPIRATION SIGN IN CONTACT US

LAMPS PLUS
THE NATION'S LARGEST LIGHTING RETAILER

LP LUXURY LIGHTING

Search SAVED CART

4+

DESIGN CHAT VIEW IN YOUR ROOM

MOST POPULAR

# Marlowe 13 1/4"H Galvanized Hooded Cage Outdoor Wall Light

16 Reviews | 7 Questions, 13 Answers

**$79.99**

Comparable Value $119.99

FREE SHIPPING & **FREE RETURNS***
**SHIPS TODAY** if ordered in the next 6 Hr. 53 Min.

1 ADD TO CART SAVE

MORE OPTIONS

## PRODUCT DETAILS

A stylish galvanized metal finish graces the metal cage frame of this nautical-style outdoor wall light.

### Additional Info:

The Marlowe collection of outdoor lighting offers a creative combination of nautical style and industrial design. This metal outdoor wall light features a stylish cage design with a hood on top and a narrow clear glass shade inside. A galvanized metal finish completes the hardy rustic look. Perfect for lighting up a patio area or garage space.

JOHN TIMBERLAND LIGHTING

Shop all John Timberland

- 13 1/4" high x 9 1/2" wide. Extends 10" from the wall. Round backplate is 5 1/4" wide. Weighs 3.08 lbs.
- Uses one maximum 60 watt standard-medium base tube bulb (not included). Shown with an Edison filament bulb.
- Outdoor wall light for porches and patios. From the Marlowe collection by John Timberland. Based on industrial barn lights and coastal designs.
- Galvanized metal finish cage frame with hood. Clear glass shade inside.
- Wet location outdoor rated. Can also be used indoors.

## RECOMMENDED BULBS

**60W Equivalent Clear 8.5W LED Dimmable JA8 Standard Bulb**
Style # 80M08

1

**$9.99 ea.**

ADD TO CART

## MORE YOU MAY LIKE

$79.99

$79.99

$69.99

$69.99

$79.99

## FREQUENTLY BOUGHT TOGETHER

Marlowe 10 3/4" High Galvanized Cage Outdoor Ceiling...

$69.99

Urban Barn 10 1/4"W Galvanized Steel Outdoor Ceiling...

$49.95

Franklin Park 13" High Galvanized Steel Outdoor Wall...

$99.99

## RELATED VIDEOS

Best Wall Sconce Tips and Ideas

Outdoor Lighting Size Guide

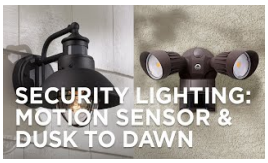


Security Lighting

Outdoor Buying Guide

## Q & A

Need Immediate Help? Try CHAT

Questions that need answers | My Posts

ASK A QUESTION:

Have a question? Ask owners.

Start typing your question and we'll check if it was already asked and answered. Learn More

**QUESTION:** **Is it dusk to dawn? If not can it be made dusk to dawn somehow?**
Mary M on May 4, 2020

**ANSWER:** The light is not dusk to dawn. You could try using a Dusk to Dawn Sensor Light Bulb.
Reply · Inaccurate · Justin Z Staff on May 4, 2020

Add Answer · I Have This Question Too (0)

**QUESTION:** **Is there a protective coating that can be applied for coastal area, i.e. car wax or another alternative application?**
Theresa C on Mar 2, 2020

**ANSWER:** We would recommend finding an outdoor wall light that is marine grade.
Reply · Inaccurate · Dan T Staff on Mar 2, 2020

Add Answer · I Have This Question Too (0)

**QUESTION:** **Is there a spec sheet for Marlowe 13 1/4”?**
BETSY D on Feb 17, 2020

**ANSWER:** The specs listed for this wall light are noted on our website. If more information is needed then what is stated, please contact one of our Lighting and Home Décor Specialist for further assistance. They can be reached by phone, email, or chat: https://www.lampsplus.com/contact-us/
Reply · Inaccurate · Dan T Staff on Feb 17, 2020

Add Answer · I Have This Question Too (0)

**QUESTION:** **How does this attach to an electrical box? Can I use an octagonal metal box? Does the box need to be oriented in any particular way? The boxes that I have use screws on the diagonal. Does this fixture come with an adapter to attach to this type of box?**
A shopper on Jun 17, 2019

**ANSWER:** The mounting bracket for these is VERY versatile. The only issue I have had is if the junction box is mounted to that the screws for the bracket are exactly horizontal…any other angle will work…and in the case mentioned, I removed the screws holding the junction box to the wall, rotated it and put the screws back in.
Reply · Inaccurate · Christopher C on Apr 16, 2020 · *Purchased on Mar 31, 2020*

**Read All 2 Answers** · Add Answer · I Have This Question Too (0)

**QUESTION:** **We are located near the ocean, will this rust?**
Johanna F on May 6, 2019

**ANSWER:** Hi - this outdoor wall light is wet location rated and very durable for outside usage, but the finish is not meant for coastal areas. For resistance to salt-air in coastal environments, you should select a fixture with a "Marine Grade" finish. We have an array of great choices including Vivex, Coastal Armor and more. I have added a helpful link below for some great options which are currently offered. https://www.lampsplus.com/products/outdoor-lighting/usage_wall-light/s_marine-grade/
Reply(1) · Inaccurate · Dan T Staff on May 7, 2019

**Read All 3 Answers** · Add Answer · I Have This Question Too (0)

SHOW 2 MORE QUESTIONS FOR THIS PRODUCT +

## CUSTOMER REVIEWS

Review This Item For a Chance to Win $500.00! view rules

Review More Purchases | My Posts

**4.5 / 5.0**

**16 Reviews**

| | |
|---|---|
| 5 Stars | 12 |
| 4 Stars | 1 |
| 3 Stars | 2 |
| 2 Stars | 1 |
| 1 Star | 0 |

**Customer Gallery**

Search reviews and questions

Sort by Most Helpful

**Good quality "Galvanized look" not actually galvanized fixture**

September 7, 2018
Michael T
*Purchased over 2 years ago*

I was taken aback at first when I realized that the finish was not really galvanized (zinc plating, neither electroplated or hot-dipped) but the quality of the galvanized-look paint finish was so good, that I was not worried. I was installing five of these and only two would be directly exposed to rain and they were not going to be getting a lot of direct sun. The other three would be under eaves. My only other complaint is the massive amount of blocks of molded EPS (commonly called styrofoam) that I ended up. This should not go into landfills and almost no recycling programs Read More

Was this review helpful? (4) (0) · Flag as Inappropriate

**These are NOT galvanized**

November 27, 2017
jenny l

While they are described as galvanized, arrived and found they look more like silver camo painted, don't even look like galvanized color. Not what I expected. Otherwise well made.

Was this review helpful? (2) (0) · Flag as Inappropriate

Awesome! I would definitely recommend ordering from lamps plus!

May 14, 2018
Lori T
*Purchased over 2 years ago*

Was this review helpful? (1) (0) · Flag as Inappropriate

Very easy website, got confirmation email
Product came quickly

December 7, 2017
Sue M

*Purchased over 3 years ago*

Was this review helpful? (1) (0) · Flag as Inappropriate

**Great Farmhouse Style**

October 11, 2018
Dorothy O

*Purchased over 2 years ago*

Love this light. It was recently featured in Country Living magazine as porch lighting g for a “relaxed” look. It’s made very well as it has a glass dome that encases the light and the metal cover fits over the glass. Gives good light coverage for safety.

Was this review helpful? (1) (0) · Flag as Inappropriate

SHOW 10 MORE REVIEWS FOR THIS PRODUCT +

BACK TO TOP

**TOWN PLANNER** • 732 Main Street, Harwich, MA 02645

*508-430-7511 fax: 508-430-4703*

**AGENDA ITEM # III.B**

To: Planning Board
From: Charleen Greenhalgh, Town Planner
Date: February 1, 2021
Re: Staff Report #4 – Site Plan Review Special Permit & Use Special Permit

**PB2020-26 The Royal Apartments LLC, as owner**, Benjamin E. Zehnder, Esq, Representative, seeks approval of Special Permits for Multifamily Use, Site Plan Review and Harwich Center Overlay District for the proposed use and additional parking and other appurtenances pursuant to the Code of the Town of Harwich §325-51.Q (approved at the 9-26-2020 Town Meeting), §325-55 and §325.51.O (Harwich Center Overlay District), respectively. The property is located at 328 Bank Street, Map 41, Parcel N4 in the M-R-L zoning district.

A public hearing on this matter was originally opened on Thursday, November 19, 2020. The Board voted to continue the hearing and to allow for an amendment to the application to include a Harwich Center Overlay District Special Permit, thus necessitating a new legal notice and renotification of the abutters. A new public hearing was scheduled for Thursday, December 17, 2020 not earlier than 6:30pm. Abutters were originally notified via certified mail on October 30, 2020; however the renotification did not happen until December 10, 2020, thus requiring a further continuance to January 12, 2021. Testimony was taken at the January 12, 2021 meeting and the hearing was further continued to February 9, 2021, in part to request an opinion from Town Counsel.

**Description**

The applicant seeks approval for a Site Plan Review Special Permit, a Use Special Permit for Multifamily and a Historic Center Overlay Special Permit for the two existing buildings on the site. The property had previously be used as an Assisted Living Facility and the new owner seeks approval for 26 apartments. Additional parking and an accessible front entrance will be added. The application was filed with the Town Clerk on October 13, 2020, and revised plans submitted on October 22 and 28, 2020 and November 5, 2020, and an amended application submitted November 18, 2020, subsequent information submitted on November 25, 2020, and a further letter from Attorney Zehnder on January 28, 2021; including the following:

1. Form A – Special Permits & Site Plan Review
2. Form A Amended – Special Permits & Site Plan Review, received November 18, 2020
3. Amended - List of Waivers dated November 24, 2020
4. Filing fee of $525 to cover the amended Special Permit request
5. Municipal Lien Certificate
6. AMENDED project narrative dated October 22, 2020 by Benjamin E. Zehnder
7. Packet of previous Board of Appeals decision and other correspondence
8. Set of plans for Royal Apartments, LLC., prepared by Coastal Engineering Co.:

a. Plan Showing Existing Site Conditions, dated 10-13-19, revised 1-6-2020 and 10-9-2020, scale 1" = 20', Sheet C1.1.1.
b. Plan Showing Proposed Site Layout and Materials, dated 12-5-2019, revised 1-6-2020, 10-9-2020 and 10-21-2020, scale 1" = 20', Sheet C2.1.1.
c. Plan Showing Proposed Grading and Drainage, dated 12-5-19, revised 1-6-2020 and 10-9-2020, scale 1" = 20', Sheet C2.2.1.
d. Site Details, dated 12-5-19, revised 1-6-2020 and 10-9-2020, scale as noted, Sheet C2.4.1.
e. Utility Details, dated 12-5-19, revised 1-6-2020 and 10-9-2020, scale as noted, Sheet C2.4.2.

9. Set of plans for Royal Apartments, prepared by David H. Dunlap Associates, Inc.:
   a. Landscape and Site Electrical Plan, dated 10/13/20, scale 1" = 20', Sheet SP-1.
   b. Parking Lot Lighting and Photometric Plan, dated 10/13/20, scale 1" = 20', Sheet SP-2.
   c. Ground Floor Plan, dated 10/19/20, scale 1/8" = 1'-0", Sheet A-1.
   d. First Floor Plan, dated 10/19/20, scale 1/8" = 1'-0", Sheet A-2.
   e. Second Floor Plan, dated 10/19/20, scale 1/8" = 1'-0", Sheet A-3.
   f. Third Floor Plan, dated 10/19/20, scale 1/8" = 1'-0", Sheet A-4.
   g. Accessory Building Floor Plan, dated 10/19/20, scale 1/8" = 1'-0", Sheet A-5.
   h. Exterior Elevations, dated 10/13/20, scale 1/8" = 1'-0", Sheet A-6.
10. Stormwater Management Report for 328 Bank Street, Harwich, MA dated December 6, 2019, Revised: October 8, 2020, prepared for Royal Apartments LLC, Prepared by Coastal Engineering Co., Inc.
11. Letter from Attorney Benjamin Zehnder, dated January 28, 2021.

**MGL Reference and Planning Board Jurisdiction**

Pursuant to MGL c.40 A, §9 the Planning Board must, within 65 days of submission of application for a special permit hold a public hearing. The decision of the Planning Board shall take place within 90 days following the close of the public hearing. Further, a special permit issued shall require a two-thirds vote of the Board.

The Planning Board has jurisdiction to review this application pursuant to the Code of Town of Harwich pursuant to **§325-55 for Site Plan Review Special Permit**. Further, pursuant to §325-55.E.(1) "*If the site plan meets the requirements of this By-law and the Planning Board Rules and Regulations Governing Subdivision of Land and Site Plan Review, as amended, the Planning Board shall approve it"*. However, the Board cannot deny approval of a site plan for a use which is allowed by right (not by special permit) in the district, but may impose reasonable conditions on the proposed use. Please refer to §325-55.E. for specific allowable conditions.

For the Use Special Permit, the Multifamily Bylaw Zoning Amendment was approved at the September 26, 2020 Annual Town Meeting and approved by the Massachusetts Attorney General on January 12, 2021.

The new §325-51.Q provides the following:

**§325-51.Q Multifamily Special Permit**

1. The Planning Board shall serve as the special permit granting authority for multifamily developments, including conversion of existing structures/uses to multifamily and/or new construction.
2. A Site Plan Review special permit pursuant to §325-55 is also required.
3. All multifamily dwellings must be connected to a municipal water system.
4. A habitable room in a multifamily dwelling unit shall have a minimum floor area of not less than 120 square feet and shall have no major width or length dimension less than 10 feet. Closets, storage spaces, bathrooms and kitchens are not habitable rooms for the purpose of these minimum area and dimension requirements.
5. The number of multifamily dwelling units shall be determined by the ability to place an adequately size septic system for the number of bedrooms; and required parking per number of units and landscaping on the site pursuant to Article IX Off-Street Parking and Loading Requirements.
6. All outside entrances to multifamily dwellings shall provide protection to the immediate area in front of said entrance from the weather.
7. Whenever the land upon which a multifamily dwelling is to be erected is located partially within a Drinking Water Resource Protection District, maximum possible use of the area outside the Drinking Water Resource Protection District will be made for the disposal of stormwater runoff and sewage.
8. Recreation areas. Where appropriate to the topography and natural features of the site, the Planning Board may require that at least 10% of the open space or two acres (whichever is less) shall be of a shape, slope, location and condition to provide an informal field for group recreation or community gardens for the residents of the multifamily development.

**§325.51.O - Harwich Center Overlay District**, provides the following:

1. Purpose. The Harwich Center Overlay District enables the development and redevelopment of Harwich Center to be in keeping with its historic development patterns, including the size and spacing of structures and provision of open space. The redevelopment of existing structures will encourage them to come into compliance with current plumbing, electric and building codes, as well as the latest fire and handicapped access regulations. Agencies involved with historic preservation will be encouraged to make recommendations on proposed development or redevelopment.

2. Scope.
   a. Within the Harwich Center Overlay District, only property that is currently within the Commercial - Village (CV) Zoning District in Harwich Center is permitted to utilize this section, with the following two exceptions: property located on the southeast corner of the intersection of Sisson Road and Parallel Street just east of Forest Street, currently shown on Assessor's Map 40 as Parcel Z5, and the parcel located at the southwest corner of the intersection of Bank Street and Parallel Street, currently shown on Assessor's Map 41 as Parcel N4, are also permitted to utilize this section. All property owners, including the Town of Harwich, are required to locate the majority of structures on the street frontage portion of the property and to locate parking, septic and open space to the rear of the property.
   b. The dimensional requirements, including building setbacks, maximum site coverage and heights of these structures, are outlined in Subsection O(5) of this section.

c. This bylaw is intended to be used in conjunction with other regulations of the Town, including site plan review and other bylaws designed to encourage appropriate and consistent patterns of village development.
d. Applicants, with the approval of the Board of Health, and other agencies as required are encouraged to utilize new and improved technologies for septic treatment and stormwater drainage purposes.

3. Location. The Harwich Center Overlay District is shown on the following map: Harwich Center Overlay District, October 2003, prepared by the Town of Harwich Planning Department. The Harwich Center Overlay District is bounded on the south by Parallel Street from Bank Street to Sisson Road, but including the parcel on the south side of Parallel Street at Bank Street (also shown on Harwich Assessor's Map 41 as Parcel N4) and the parcel on the south side of Parallel Street at Sisson Road (also shown on Harwich Assessor's Map 40 as Parcel Z5); the district is bounded on the west by Sisson Road, Route 39 (Main Street) and Route 124 (Pleasant Lake Avenue); the district is bounded on the north by Old Colony Way to the west boundary line of Parcel C4-B, on Assessor's Map 41; the district is bound on the east by the west boundary line of Parcel C4-B, on Assessor's Map 41, and the east boundary line of the Town of Harwich owned land (Parcel C302 and C5, on Assessor's Map 41) and Bank Street to the southeast corner of Parcel N4 at Bank Street.

4. Procedure.
   a. The Planning Board shall serve as the special permit granting authority for developments within the Harwich Center Overlay District.
   b. Prior to the submission of an application for special permit under this bylaw, the applicant may meet with the Planning Board at a public meeting for a preapplication conference to discuss the proposed development in general terms and establish the plan filing requirements. The Planning Board shall schedule a meeting for a preapplication conference following a written request from the applicant, inviting preliminary comments from the Board of Health, Conservation Commission, and any other interested officials or agencies. The purpose of this preapplication conference is to inform the Planning Board as to the nature of the proposed project. As such, no formal filings are required for the preapplication conference. However, the applicant is encouraged to prepare sufficient preliminary architectural and/or engineering drawings to inform the Planning Board of the scale and overall concept of the proposed project and its relationship to abutting properties.
   c. Special permit applications shall comply with and be subject to the requirements of § 325-55, Site plan approval.

5. Dimensional requirements.
   a. Setback requirements:
      1. Front setback requirements shall be determined at the time of site plan review based on existing development patterns and the elements of the proposed project.
      2. Side lot line setback shall be 10 feet.
      3. Rear lot line setback shall be 10 feet.
   b. Parking shall be permitted at the side or rear of the property.
   c. Maximum site coverage shall not exceed 80%.

d. The maximum permitted height for new constructions shall not exceed 30 feet or 2 1/2 stories.
e. Minimum lot size shall be 15,000 square feet.
f. The Board may waive or modify these dimensional requirements if it finds that such waiver or modification will not substantially derogate from the purpose and intent of this bylaw and that such waiver or modification may be granted without substantial detriment to the neighborhood or overall public good.

6. Uses. Uses permitted by right or special permit for the underlying zoning district remain. However, the following additional uses are allowable by special permit in the Harwich Center Overlay District, provided that all other zoning requirements herein are met:
   a. Inn.
   b. Bed-and-breakfast.

**Waivers**

The following waivers have been requested. The explanation from Attorney Zehnder is shown in *italics.*

1. Filing Fee – *Waiver was approved by the Planning Board at its May 12, 2020 meeting.* Please note however that due to the amended request, an additional $525 fee was submitted.
2. Variance Notations on Plan – *Copies of variances and special permits provided in application packet.*
3. Existing Driveways within 100 feet of site – *The site plan shows existing driveways across Parallel and Bank Streets from locus. Showing driveways within 100 feet would require significant increase in the scale of the plan and there is no proposed increase in traffic.*
4. Lighting – *The applicant requests a waiver of the requirement to show lighting on the existing building as there are no changes proposed.*
5. Freestanding Signs – *The applicant has not determined the location of signage and will conform all signage to the sign bylaw.*
6. Parking Area Setback Requirements - *The applicant requests that the Planning Board waive parking area setback requirements set forth in Bylaw § 325-42L pursuant to the Boards right to waive such setbacks as set forth in Bylaw § 325-51.O(5)(F).*

**Comments from other Boards, Departments, Committees**

**Health:** The Senior Health Agent reviewed the application for approval of a multi-family use special permits in the Harwich center overlay district and a site plan review special permit at 328 Bank Street. The septic system was originally designed for 31 assisted living rooms, plus additional office space, for a total flow of 4773 gallons per day. The proposed floor plans show that 33 bedrooms are proposed, with a total flow of 3630. As the plan is proposed, the Health Department has no concerns, however; we do require that a passing Title 5 inspection be submitted prior to any building permit approval.

**Fire Chief:** No issues for the Planning Board from Fire for this project.

**Conservation:** As proposed all work is outside the 100' buffer zone. Erosion control shall be install on the 100' line to ensure work stays out of conservation jurisdiction. Permits required if work will enter conservation jurisdiction. So long as no new activity is happening in the 100' wetland buffer, conservation has no jurisdiction.

**Police:** The Deputy Chief had the traffic officer look at the plans. Here are Officer Holmes Comments, after meeting with Carla Burke, via email December 22, 2020: *"I had a nice conversation with Carla and explained where our input comes from as far as looking at past crashes and traffic complaints. She was happy I listened to her voice and concerns. After talking with her I did recognize one problem. The height and/or location of the current fence along Bank St limits the sightline looking south. Could we have planning recommend the fence be removed and/or reduced in height to meet the provisions of the Bulk Height By-Law? No other concerns from me."*

**DPW/Highway:** See Planning Staff Comment below regarding a sidewalk. Previously, there were no concerns.

**Engineering:** The Town Engineer reviewed the plans with the Town Planner; comments are noted below. Additionally, he will be reviewing in detail the Stormwater Report and provide comments as needed.

**<u>Planning Staff Comments</u>**

1. At the January 12, 2021 public hearing, the Board voted to request an opinion from Town Counsel on whether the application as presented is lawfully before the Planning Board and whether the Planning Board can act on the requests before it. A copy of Town Counsel's opinion is attached for the Board's review; however, a copy is not included in the electronic packet as this is privileged correspondence. I can publicly report that it is Town Counsel's opinion that the Planning Board can act on the requests that are before the Board.
2. On Tuesday, January 19, 2021 an on-site with Attorney Zehnder, two principals from The Royal Apartments, LLC, DPW Director Lincoln Hooper, DPW Road Manager Chris Nickerson and Interim Town Planner Charleen Greenhalgh was held to discuss a sidewalk along Parallel Street. Based on that on-site, Mr. Hooper provided the following additional comments via email:

   *As discussed in the field today, the Town of Harwich has no plans to install a sidewalk on Parallel Street. That said, we did try to include a sidewalk on this section of Parallel Street in the Safe Routes to School Grant that the Town was awarded, which was pulled from consideration over project costs. Although Chris Nickerson, Road Manager, and I are ambivalent as to whether the Planning Board requires a sidewalk as part of their conditions for this private development, we would not be opposed to a short one being constructed to connect this project to the existing sidewalk on Bank Street. Given the lack of pedestrian connectivity on Parallel Street and the lack of any plans to construct one, we certainly understand if the Planning Board wants the applicant to make a payment to the Town's sidewalk fund in lieu of having them construct a sidewalk to nowhere.*

   The applicant has requested that an "in lieu of" contribution of $10,000 be made to the Sidewalk Fund. If the Board is agreeable to this, I would recommend that the contribution be made prior to the issuance of a building permit, rather than the issuance of the occupancy permit as proposed by Attorney Zehnder.
3. All items of concern raised by the Town Engineer and Town Planner have been met.
4. The requested waivers are reasonable.
5. At this time, the plans and requirements of the zoning bylaws appear to have been met.
6. As of January 5, 2021, 16 letters/emails were received from abutters and a legal representative of abutters. These are not included again as the Board members have these from the previous packet and they are also available on the January 12, 2021 online agenda packet.

7. As of February 1, 2021, three (3) additional letters have been received. Copies of these letters are attached.
8. Generally I do not comment beyond the requirements for site plan review and special permits; however, I do want to point out that the various town departments, the Town's professional staff (Health, Conservation, Police, Fire, DPW, Engineering, and Planning) has reviewed and commented on this application.
9. Additionally, the application before the Planning Board is not for "Capital A" affordable housing, which would be a Comprehensive Permit (aka 40B) before the Zoning Board of Appeals. The application before the Board is for multifamily housing. The applicant has agreed to restrict in perpetuity two (2) studio units.
10. Reasonable conditions are recommended including:
    a. Erosion control shall be install and maintain during construction on the 100' conservation buffer line to ensure work stays out of conservation jurisdiction. Permits from Conservation shall be required if work enters conservation jurisdiction.
    b. A passing Title 5 inspection be submitted to the Health Department prior to any building permit approval.
    c. The existing fence on Bank Street shall be removed and/or reduced in height to meet the provisions of the Bulk Height By-Law.
    d. As agreed to by the applicant, two (2) studio units shall be held in perpetuity for rental exclusively to person meeting the guidelines for low and moderate-income families as determined by the United State Department of Housing and Urban Development ("HUD") Published Income Guidelines and as may from time to time be amended.
    e. In lieu of constructing a sidewalk along Parallel Street the applicant shall submit $10,000 to the Town of Harwich, through the Planning Office, for the Sidewalk Fund, prior to the issuance of a building permit.
    f. All signage shall comply with the Sign Code, Historic District & Historical Commission and Building Department Requirements.
    g. All lighting shall comply with the Lighting Code and Historic District & Historical Commission Requirements.
    h. Appropriate approvals from the Historic District & Historical Commission shall be required.
    i. Any changes to the approved site may require additional review and approvals from the Planning Board and the Historic District & Historical Commission.
    j. This decision shall be recorded at the Barnstable County Registry of Deeds.
    k. Conformance with all review procedure requirements outlined pursuant to §400-18.G Inspection, certificate of completion and as-built plan, of the Code of the Town of Harwich shall be met.

## VOTES

**<u>Continuance</u>**

If the Board will require additional information or wants to take the matter under advisement the following motion is recommended:

Move to continue the hearing for **PB2020-26 Royal Apartments LLC,** to no earlier than 6:30 pm on ____ (Next Meeting Dates: *Jan. 26, Feb. 9, Feb. 23)* for the following reason(s): *Need to provide reasons for the continuance…additional information…taking it under consideration….*

**IF THE PLANNING BOARD IS READY TO CLOSE THE PUBLIC HEARING:**

## I. Vote to Close the Public Hearing

## II. Vote on Waivers:

To approve the following waivers and accept the reasons for each waiver as provided by the applicant:

1. Filing Fee.
2. Variance Notations on Plan.
3. Existing Driveways within 100 feet of site.
4. Lighting.
5. Freestanding Sign.
6. Parking Area Setback Requirements.

## III. Vote to Adopt Proposed Findings:

To adopt the following findings of fact (***the Board may wish to add or change findings***):

1. The property is located within the M-R-L zoning district and the Harwich Center Overlay district.
2. The existing structure has been used as an assisted living facility containing 31units.
3. 26 apartment units are proposed all of which meet the minimum floor area requirements.
4. Appropriate and adequate parking shall be provided on the subject site.
5. Multifamily Use is allowable within the MR-L zoning district with a Special Permit.
6. The Harwich Center Overlay District allows for waivers from dimensional provisions.
7. Two of the units will be held in perpetuity for low and moderate income families consistent with HUD Guidelines.
8. The use as developed will not adversely affect the neighborhood.
9. The specific site is an appropriate location for such a use.
10. The design is appropriate and consistent patterns of village development.
11. There will be no nuisance or serious hazard to vehicles or pedestrians.
12. Adequate and appropriate facilities will be provided for the proper operation of the proposed use, including appropriate sewage treatment.

## IV. Vote on Multifamily Use special Permit (*Please Note*: An affirmative vote by at least five Planning Board members is required.)

A. To **approve with conditions** case PB2020-26 The Royal Apartments LLC, for a Use Special Permit for Multifamily Use pursuant to the Code of the Town of Harwich §325-51.Q (approved at the 9-26-2020 Town Meeting) for property located at 328 Bank Street, Map 41, Parcel N4 in the M-R-L zoning district, based on the aforementioned findings of fact and the fact that the application meets the necessary requirements and criteria for approval pursuant to the Code of Town of Harwich. The following condition is imposed: ***(Note need to determine and outline the conditions.)***

   1. A passing Title 5 inspection be submitted to the Health Department prior to any building permit approval.
   2. Two (2) studio units shall be held in perpetuity for rental exclusively to person meeting the guidelines for low and moderate-income families as determined by the

United State Department of Housing and Urban Development ("HUD") Published Income Guidelines and as may from time to time be amended.

3. All signage shall comply with the Sign Code, Historic District & Historical Commission and Building Department Requirements.
4. This decision shall be recorded at the Barnstable County Registry of Deeds.

B. To **deny** case number case number PB2020-26 The Royal Apartments LLC, for a Use Special Permit for Multifamily Use pursuant to the Code of the Town of Harwich §325-51.Q (approved at the 9-26-2020 Town Meeting) for property located at 328 Bank Street, Map 41, Parcel N4 in the M-R-L zoning district, based on the fact that the application does not meet the necessary requirements and criteria for approval pursuant to the Code of Town of Harwich, specifically…***(Note: need to list the specific requirements that have not been satisfied.)***

**V. <u>Vote on Harwich Center Overlay District Special Permit</u> (*Please Note*:** An affirmative vote by at least five Planning Board members is required.)

A. To **approve** case number PB2020-26 The Royal Apartments LLC, for a Special Permit pursuant to the provision of §325-51.O – Harwich Center Overlay District of the Code of the Town of Harwich for property located at 328 Bank Street, Map 41, Parcel N4 in the M-R-L zoning district, based on the aforementioned findings of fact and the fact that the application meets the necessary requirements and criteria for approval pursuant to the Code of Town of Harwich.

B. To **deny** case number PB2020-26 The Royal Apartments LLC, for a Special Permit pursuant to the provision of §325-51.O – Harwich Center Overlay District of the Code of the Town of Harwich for property located at 328 Bank Street, Map 41, Parcel N4 in the M-R-L zoning district, based on the fact that the application does not meet the necessary requirements and criteria for approval pursuant to the Code of Town of Harwich, specifically…(***Note: need to list the specific requirements that have not been satisfied.***)

**VI. <u>Vote on Site Plan Review Special Permit:</u> (*Please Note*:** An affirmative vote by at least five Planning Board members is required.)

A. To approve with ***conditions*** case number **PB2020-26 The Royal Apartments LLC,** for a Site Plan Review for the proposed use, Multifamily, and additional parking and other appurtenances pursuant to the Code of the Town of Harwich §325-55 for property located at 328 Bank Street, Map 41, Parcel N4 in the M-R-L zoning district. The decision is based on the aforementioned findings of fact, the fact that the application meets the necessary requirements and criteria for approval pursuant to the Code of Town of Harwich and the fact that the Multifamily Use is permitted by Special Permit in the zoning district. The following conditions are imposed:

1. Erosion control shall be install and maintain during construction on the 100' conservation buffer line to ensure work stays out of conservation jurisdiction. Permits from Conservation shall be required if work will enter conservation jurisdiction.

2. A passing Title 5 inspection be submitted to the Health Department prior to any building permit approval.
3. The existing fence on Bank Street shall be removed and/or reduced in height to meet the provisions of the Bulk Height By-Law.
4. Prior to the issuance of a building permit and in lieu of constructing a sidewalk along Parallel Street the applicant shall submit $10,000 to the Town of Harwich, through the Planning Office, for the Sidewalk Fund.
5. All signage shall comply with the Sign Code, Historic District & Historical Commission and Building Department Requirements.
6. All lighting shall comply with the Lighting Code and Historic District & Historical Commission Requirements.
7. Appropriate approvals from the Historic District & Historical Commission shall be obtained as required.
8. Any changes to the approved site may require additional review and approvals from the Planning Board and the Historic District & Historical Commission.
9. This decision shall be recorded at the Barnstable County Registry of Deeds.
10. Conformance with all review procedure requirements outlined pursuant to §400-18.G Inspection, certificate of completion and as-built plan, of the Code of the Town of Harwich shall be met.

B. To ***deny*** the Site Plan Review Special Permit for case number PB2020-26 The Royal Apartments LLC, for the proposed use, Multifamily, and additional parking and other appurtenances pursuant to the Code of the Town of Harwich §325-55 for property located at 328 Bank Street, Map 41, Parcel N4 in the M-R-L zoning district, based on the fact that the Use Special Permit was denied and therefore the Site Plan Review Special Permit cannot be granted.

La Tanzi Spaulding & Landreth

8 Cardinal Lane
Orleans

14 Center Street, Suite 4
Provincetown

3010 Main Street, Suite 2E
Barnstable

**Benjamin E. Zehnder**
Direct Tel: 508.255.2133 ext. 128
bzehnder@latanzi.com

January 28, 2021

Duncan Berry, Chair
Harwich Planning Board
732 Main Street
Harwich, MA 02645

Via email only to ebanta@town.harwich.ma.us

Re: **PB 2019-45 Royal Apartments LLC**

Dear Mr. Berry and Board Members:

At your meeting of January 12, 2021, you requested that the applicant submit for review by the Board a proposal for addressing pedestrian access along Parallel Street. We have met at the site with Lincoln Hooper, Director of Highways and Maintenance, Chris Nickerson, Road Manager and Interim Town Planner Charleen Greenhalgh. Based upon this meeting, it is our belief that we can install a sidewalk within the town layout of Parallel Street from the eastern sideline of the third existing (westernmost) entry onto the property to Bank Street.

We do not believe that this is advisable since such a sidewalk will not connect at its westerly end with any other sidewalk, and since there are no present plans by the Town to construct any sidewalk along Parallel Street. In lieu of such construction the applicant is prepared to offer a one-time contribution to the Sidewalk Fund in the amount of $10,000.00, which is the estimated cost of construction of the sidewalk per the attached estimate. This payment would be made upon the issuance of a certificate of occupancy for the project.

Secondly, the Board requested that we submit a written description of a proposed affordable restriction for the project. We submit the following proposed restriction:

The applicant will set aside two studio units in perpetuity for rental exclusively to persons meeting the guidelines for a low or moderate-income family. Low income families shall have an income less than eighty (80) percent of the Town of Harwich median family income, and moderate income families shall have an income between eighty (80) and one

hundred twenty (120) percent of the Town of Harwich median family income, as determined by the United States Department of Housing and Urban Development (HUD) Published Income Guidelines, and as may from time to time be amended. This condition could be contained in the Planning Board's decision which is required to be recorded with the Barnstable County Registry of Deeds prior to obtaining a building permit.

Thank you for your attention.

Very truly yours,

Benjamin E. Zehnder

BEZ/
cc via email only:
client
Charleen Greenhalgh, Interim Town Planner

# ESTIMATE

**Royal Apartements LLC.**

**% Alex Bardin**
328 Bank St.
Harwich MA

(617) 593-4896

**Dimitri's Painting & Masonry**
5 Greenlodge Street
Dedham, Massachusetts 02026

Phone: (646) 856-6816
Email: dimitripainting@gmail.com

Estimate # 000937 Date 01/25/2021

**Description Total**

- Remove and dispose of all existing “curbing” and sidewalk materials from the corner of Bank St. to the near edge of the new driveway location (approximately 200 feet down Parallel St)
- Install 5 inch granite curbing approximately 160 linear feet in accordance with all government regulations.
- Install Driveway aprons for the emergency vehicle access and drive and the main entrance on Parallel street in accordance with all government regulations.
- Install new asphalt sidewalk approximately 160 ft by 5 ft in accordance with all government regulations.

This proposal does not include the cost of any required permits and police details.

Work to be performed in spring of 2021

**Signed and Accepted**

**Subtotal** $9,725.00

_____

**Total $9,725.00**

La Tanzi
Spaulding
& Landreth

8 Cardinal Lane
Orleans

14 Center Street, Suite 4
Provincetown

3010 Main Street, Suite 2E
Barnstable

**Benjamin E. Zehnder**
Direct Tel: 508.255.2133 ext. 128
bzehnder@latanzi.com

November 18, 2020

Anita N. Doucette, Town Clerk
Harwich Town Hall
732 Main Street
Harwich, MA 02645 Via hand delivery

Re: Planning Board Application PB2020-06
328 Bank Street, Harwich / Map 41, Parcel N4

Dear Ms. Doucette:

Please find enclosed for filing with the above matter the following submittals to the Harwich Planning Board:

1. Amended Application – 2 copies;
2. Amended Narrative – 2 copies;
3. Filing Fee in the amount of $525.00

This correspondence constitutes a request to the Planning Board that matter no. PB2020-06 be permitted to be amended as set forth herein to add a request for a so-called Harwich Center Overlay District special permit pursuant to Harwich Zoning Bylaw Section 325.51.O.

Thank you for your attention.

Very truly yours,

Benjamin E. Zehnder

BEZ/
cc via email only:
Charleen Greenhalgh, Town Planner
David Michniewicz, Client, Matt Nelson, David Reid, Esq.

AMENDED APPLICATION
11/18/2020
BZ

# TOWN OF HARWICH PLANNING DEPARTMENT

**SPECIAL PERMITS & SITE PLAN REVIEW** **FORM A**

TO THE TOWN CLERK, HARWICH, MA DATE October 13, 2020

## PART A – APPLICANT INFORMATION/AUTHORIZATION

| | |
|---|---|
| Applicant Name(s) | The Royal Apartments LLC<br>8 Alton Place, Brookline, MA 02446 |
| Representative/Organization<br>**(Who will serve as the primary contact responsible for facilitating this application?)** | Benjamin E. Zehnder<br>La Tanzi, Spaulding & Landreth |
| Mailing address | P.O. Box 2300 |
| Town, ST, Zip | Orleans, MA 02653 |
| Phone | (508) 255-2133 ext. 128 |
| Fax | (508) 255-3786 |
| E-mail | bzehnder@latanzi.com |

The applicant is one of the following: *(please check appropriate box)*
☒ Owner ☐ Prospective Buyer* ☒ Representative for Owner/Tenant/Buyer*
☐ Tenant* ☐ Other*_____

***Written permission of the owner(s) and a municipal lien certificate (where applicable) is required.***

All other forms and information as required in the Harwich Code Chapter 400, Rules and Regulations, shall be submitted as part of this application.

### Authorization

Your signature hereby asserts, to the best of your knowledge, that the information submitted in this application is true and accurate; that you agree to fully comply with the Town of Harwich Zoning By-laws and the terms and conditions of any approval of this application by the Planning Board; and authorizes the Members of the Planning Board and/or Town Staff to visit and enter upon the subject property for the duration of the consideration of this application.

10/13/20 11/18/20

Applicant

Owner(s) – Authorization must accompany application if the owner is not the applicant.

*Official use only:*

| PLANNING DEPARTMENT | TOWN CLERK |
|---|---|

Case #

## PART B – PROJECT LOCATION

| | | | |
|---|---|---|---|
| Legal Street Address | 328 Bank Street | Village/Zip Code | 02645 |
| Title Book/Page or L.C.C. # | B.C.R.D. Book 32263, Page 179 / Plan Book 389, Page 98 | | |
| Map(s) / Parcel(s) | Harwich Assessor's Map 41 Parcel N4 | | |
| Zoning & Overlay Districts | MRL; Harwich Center Overlay | *Historic? | Harwich Center Historic Dist. |
| Frontage (linear feet) | 42,403 | | |
| Total land area (s.f.) | 82,443 | | |
| Upland (s.f.) | 71,444 | Wetlands (s.f.) | 10,999 |

## PART C – PROJECT DESCRIPTION

| | | |
|---|---|---|
| Existing Floor Area in Sq. Ft | Gross: | Net: |
| Proposed Floor Area in Sq. Ft | Gross: | Net: |
| Change in Sq. Ft + / - | Gross: 0 | Net: 0 |
| Existing # of parking spaces | Proposed # of parking spaces: 43 | |
| Existing Use(s) | former nursing home / assisted living & senior day care | |
| Proposed Use(s) *Attach a separate narrative if necessary.* | Multifamily use containing 26 units. | |

The undersign hereby files an application with the Harwich Planning Board for the following special permits as proposed under the provisions of the Harwich Zoning Code: ***(check all that apply)***

**Site Plan Review § 325-55:**

☐ Any floor area expansion of any structure or expansion of exterior space, other than parking, serving any of the following: commercial, industrial, multi-family or educational use or personal wireless service facility or the creation of a drive-up or drive-through window

☒ Expansion or reconfiguration of an existing parking lot and/or driveway(s) serving said parking lot.

☒ Establishment of any new commercial, industrial, multi-family, educational, fast food/take out restaurant or personal wireless service facility.

☐ Establishment of any new retail use(s) in the Industrial (IL) Zone.

☐ Waiver of Site Plan § 325-55.F

**Article V, Use Regulations:**

☐ Paragraph_____, sub-paragraph #_____ ☐ Paragraph_____, sub-paragraph #_____

☐ Paragraph_____, sub-paragraph #_____, supplemental regulation #_____ § 325-14

**Article X, Special Permits:**

☐ Structures w/ gross floor area of 7,500+ s.f. § 325-51

☐ Structures requiring 20 or more new parking spaces § 325-51

☐ Accessory Apt./Shared Elderly Housing § 325-51.H ☐ Mixed Use § 325-51.M

☐ Drinking Water Resource Protection § 325-51.C ☐ Two Family § 325-51.N

☐ Village Commercial, Harwich Port § 325-51.L ☒ *Harwich Center Overlay § 325-51.O

☐ Signage § 325-27.F Additional Cluster, Excess SF, Non-entry Facades

**Other Special Permits:**

☐ Six Ponds Special District - Article XVI

☐ Wind Energy Systems - Article XVIII ☐ Large Scale Wind Generation – Article XIX

☒ Other (i.e. Alternate Access § 325-18.P, Special Cases § 325-44.B) Multifamily Dwelling s. 325-51(Q)

☐ Repetitive Petition (MGL Ch 40A, §16): Proposed project evolved from a previously denied plan submitted to the Planning Board on _____Year/Case # _____

**Note: Projects within the Harwich Center Overlay District may also be within the Harwich Center Historic District. This requires separate filing with the Historic District and Historical Commission. Please inquire for forms and instructions.*

*September 2011*

SECOND AMENDED Project Narrative

328 Bank Street
Assessor's Parcel ID 41-N4
The Royal Apartments LLC
Application for Planning Board Site Plan Approval and Special Permit

*November 18, 2020* *Prepared by Benjamin E. Zehnder / La Tanzi, Spaulding & Landreth*

Applicant The Royal Apartments LLC ("Royal Apartments") owns the land at 328 Bank Street, Assessor's Parcel ID 41-N4, which is a developed 82,443 sq. ft. parcel of land in Harwich's MRL (Multifamily Residential - Low Density) zoning district and the Harwich Center Overlay District and the Harwich Center Historic District. The property has 424.3' of frontage along Parallel Street and Bank Street and is improved with two existing buildings. Locus has most recently been used for nursing home / assisted living facility and a senior day care facility uses.

The applicant intends to refit the existing two structures for 26 apartment units, which will constitute a a Multifamily use allowable in the MRL district by grant of a Planning Board special permit under the Table of Use Regulations. In addition, the applicant has applied for Site Plan Approval pursuant to Bylaw § 325-55, as required by subsection (C)(2) [expansion or reconfiguration of an existing parking lot and/or driveway(s) in connection with a multifamily use] and (C)(3) [ Establishment of any new multifamily facility,] and has applied for an Harwich Center Overlay District Special Permit pursuant to Bylaw § 325-51.O.

The applicant requests that the Planning Board waive parking area setback requirements set forth in Bylaw § 325-42L pursuant to the Boards right to waive such setbacks as set forth in Bylaw § 325-51.O(5)(F).

Locus is dimensionally conforming for the proposed multifamily use, having more than the required minimum 150' of continuous lot frontage and 25' side and rear setback distances to the existing structures under the §325-16 (Table 2) Area Regulations. (Because the property is a lawfully pre-existing structure proposed for conversion to multifamily use, the 82,443 sq. ft. lot size is allowable under §325-16). In addition, the property has a proposed site coverage percentage of 48.0%, well less that the maximum site coverage percentage requirement of 80% in the Harwich Center Overlay District under §325-51(O)(5)(c).

The applicant proposes minimal reconfiguration of the existing structure. It will renovate and update the buildings' interiors and perform exterior maintenance and painting. It will also reconfiguring the parking areas to create 43 parking spaces to accommodate the proposed 26 new apartments. In connection with this work the applicant will remove one curb cut from Parallel Street and install new retaining walls adjacent to the new parking areas.

The proposed apartments will be a mix of studio, 1- and 2-bedroom apartments in the two existing buildings (14 studios, 8 one-bedroom and 4 two-bedroom units). This proposal will benefit the community by increasing the stock of year-round, lower cost apartment housing in Harwich and by contributing to a livable, pedestrian friendly town center.

*1.* *Harwich Zoning Bylaw §325-51(A)(1) Special Permit Responses*:

Residential multifamily dwelling use is allowable in the MRL district by special permit. The applicant responds to the special permit granting criteria set forth at Bylaws §325-51(A)(1) as follows:

*(a) The use as developed will not adversely affect the neighborhood:*

The property has been used as the location of a lodging house or inn going back to the 19th century, and has been used as a nursing home / assisted living facility since the mid 1980s. This area of Harwich has developed over time in conjunction with a relatively intensive residential use of locus, and the use of the property to house unrelated individuals or households is not new.

The Harwich Center area will benefit from having a greater residential base within walking distance, which will make the area more pedestrian-oriented and increase the number of people visiting local businesses and benefiting the sense of community.

The neighborhood and Harwich Center will not be adversely affected by utilizing a presently unoccupied building for the multifamily apartment use, which is closely related to the former assisted living facility in terms of how the site will be accessed, traversed, and used, and the manner in which it relates to the surrounding area.

*(b) The specific site is an appropriate location for such a use, structure or condition:*

Locus is an appropriate location for multifamily use. The two buildings have already been divided into separate living areas and hallways, with plumbing and utilities serving all living areas, making it less costly and difficult to convert the buildings to multifamily use than it would be to convert to a retail or industrial building. In addition, the parking and walkways have all been designed to support the same type and approximate number of visitors multifamily use generates.

Furthermore, the property has historically been used as accommodations, including the most recent use as an assisted living facility. As such, there will be significantly less impact on the surrounding neighborhood than would result from the installation of a different use or the conversion of the buildings to support a different type of use. The property neighbors will not have to adapt to new traffic patterns, deliveries, or structures, and will not be negatively impacted.

Together, these factors make the property an appropriate site for the proposed multifamily use.

*(c) There will be no nuisance or serious hazard to vehicles or pedestrians:*

The property has been used for residential accommodations since the 19th century, and has been used recently as an assisted living facility since the mid 1980s. The uses have not presented a nuisance or serious hazard to vehicles or pedestrians, and the similar multifamily use will not materially change the manner in which the property is accessed or used, or its relationship to the neighborhood.

Furthermore, the applicant has proposed eliminating one of the three curb cuts on Parallel Street, converting a second driveway to emergency vehicle use only, slightly widening the one remaining curb cut, and rebuilding the parking and pedestrian access within the site. The applicant does not expect a risk of nuisance or serious hazard to vehicles or pedestrians from its proposal, and expects that the proposed configuration will improve traffic safety relative to the current layout

*(d) Adequate and appropriate facilities will be provided for the proper operation of the proposed use. This includes the provision of appropriate sewage treatment facilities which provide for denitrification, when the permit granting authority deems such facilities necessary for protection of drinking water supply wells, ponds or saltwater embayments:*

The site has adequate and appropriate facilities for the proper operation of the proposed residential use. The property is served by existing utility services sufficient for the proposed 26 apartment units, including town water. The applicant proposes two new stormwater drainage systems designed to infiltrate the runoff from a 100 year storm, and the existing sewage disposal system has a permitted design flow of 4,773 g.p.d., which is in excess of the 3,300 g.p.d required for the 30 bedrooms proposed.

The applicant does not propose any new use or intensification of existing uses which would impact any water supply well, pond, or saltwater embayment, and does not propose any use within the 100' wetland buffer zone.

2. *Harwich Zoning Bylaw §325-51(Q) Multifamily Special Permit Responses*:

The applicant responds to the additional criteria for granting a Planning Board multifamily special permit set forth at Bylaws §325-51(Q) as follows:

*(1) The Planning Board shall serve as the special permit granting authority for multifamily developments, including conversion of existing structures/uses to multifamily and/or new construction:*

The applicant has submitted its within application for conversion of the existing structures to multifamily dwellings.

*(2) A Site Plan Review special permit pursuant to §325-55 is also required:*

The applicant has simultaneously filed for Site Plan Review.

*(3) All multifamily dwellings must be connected to a municipal water system:*

The property is connected to the Harwich water system.

*(4) A habitable room in a multifamily dwelling unit shall have a minimum floor area of not less than 120 square feet and shall have no major width or length dimension less than 10 feet. Closets, storage spaces, bathrooms and kitchens are not habitable rooms for the purpose of these minimum area and dimension requirements:*

No proposed habitable room has a minimum floor area of less than 120 sq. ft. or a major width or length dimension of less than 10 feet.

*(5) The number of multifamily dwelling units shall be determined by the ability to place an adequately sized septic system for the number of bedrooms; and required parking per number of units and landscaping on the site pursuant to Article IX Off-Street Parking and Loading Requirements:*

The existing sewage disposal system has a permitted design flow of 4,773 GPD. The applicant proposes 26 dwelling units containing a total of 30 bedrooms, which equals a daily flow of 3,300 gallons at 110 gallons per bedroom, in compliance with this requirement.

Per the parking and loading requirements, multifamily use requires 1.5 parking space per studio or one bedroom unit, and 2 spaces per two bedroom unit. The proposed 26 dwelling units (14 studios, 8 one-bedroom and 4 two-bedroom units) therefore require a total of 41 spaces. The applicant will provide 43 parking spaces, including two handicapped accessible spaces, and will provide in its leases and regulations that no unregistered vehicles, boats or trailers be parked on the property.

*(6) All outside entrances to multifamily dwellings shall provide protection to the immediate area in front of said entrance from the weather:*

The applicant does not propose any exterior alterations to the buildings other than installation of an awning over the Parallel Street entrance. The applicant believes that the structures comply with the intent of the bylaw requirement.

*(7) Whenever the land upon which a multifamily dwelling is to be erected is located partially within a Drinking Water Resource Protection District, maximum possible use of the area outside the Drinking Water Resource Protection District will be made for the disposal of stormwater runoff and sewage:*

Locus is not located within a Drinking Water Resource Protection District and the applicant is not proposing erecting any new buildings.

*(8) Recreation areas. Where appropriate to the topography and natural features of the site, the Planning Board may require that at least 10% of the open space or two acres (whichever is less) shall be of a shape, slope, location and condition to provide an informal field for group recreation or community gardens for the residents of the multifamily development:*

The existing site has areas of lawn and patio along the Parallel Street side of the property and behind and in front of the main building. The applicant proposes these areas for use by the residents as recreation areas.

3. *Harwich Zoning Bylaw §325-55 Site Plan Review Responses:*

Pursuant to §325-55(C)(2), Site Plan Approval by the Planning Board is required for any expansion or reconfiguration of an existing parking lot and/or driveway in connection with multifamily use, and pursuant to §325-55(E)(1) approval may be reasonably conditioned to ensure certain minimum standards are met. The applicant responds to the site plan review criteria as follows:

*(a) Reasonable measures are implemented to provide for screening of parking areas or other parts of the premises, for adjoining premises or from the street, by walls, fences, plantings or other devices:*

Locus is screened to the south, southwest, and southeast (where there is an existing wetland) by natural vegetation and trees, and no change is proposed to these areas. The applicant proposes numerous additional screening plantings of Alberta Spruce and Emerald Green Arborvitae at the westerly, northwesterly and northeasterly areas of the property, all as shown on the landscape plan. The applicant also proposes new tree clusters at five additional locations on the interior of the site. Together, these plantings will effectively provide visual screening of the parking and other areas of locus for adjoining properties and from the street.

*(b) The convenience and safety of vehicular and pedestrian traffic are enhanced:*

The applicant has proposed a redesigned parking area, with newly reconstructed sidewalks, retaining walls, fences, and landings and ramps, and has proposed elimination

of one vehicle entrance to the property, construction or reconstruction of berming at the edge of Parallel Street, and construction of a new entrance with stop sign to the road. These changes are expected to improve the convenience and safety of pedestrian and vehicular traffic to and within the site.

*(c) Surface water from parking areas and driveways will be efficiently and safely disposed of by means of a proper drainage system as specified in the Board's approval:*

The applicant has designed two new stormwater drainage systems designed with capacity sufficient to infiltrate the runoff from a 100 year storm, based on field measured soil infiltration rates and computer modeling of the site, and submits that the proposed system will dispose of surface water from the parking areas and driveways efficiently and safely. Please see proposed drainage and grading plan filed herewith.

– END –

La Tanzi
Spaulding
& Landreth

8 Cardinal Lane
Orleans

14 Center Street, Suite 4
Provincetown

3010 Main Street, Suite 2E
Barnstable

Benjamin E. Zehnder
Direct Tel: 508.255.2133 ext. 128
bzehnder@latanzi.com

October 13, 2020

Anita N. Doucette, Town Clerk
Harwich Town Hall
732 Main Street
Harwich, MA 02645 Via hand delivery

RECEIVED
OCT 13 2020
TOWN CLERK
Town of Harwich,
Mass.

Re: New Planning Board Application
328 Bank Street, Harwich / Map 41, Parcel N4

Dear Ms. Doucette:

Please find enclosed for filing the following new application submittals to the Harwich Planning Board for Site Plan Review and a use Special Permit, for the above property:

1. Application with Owner Authorization – 2 originals;
2. List of Waiver Requests – 2 copies;
3. Municipal Lien Certificate – 2 copies;
4. Narrative – 2 copies
5. Abutters List – 2 copies – original to be delivered by Assessor;
6. Copies of prior zoning and planning decisions – 2 sets
7. Coastal Engineering Plan Set – (6) full size and (11) 11x17 sets including sheets C.1.1.1 Existing Site Conditions, C2.2.2 Proposed Site Layout, 2.2.1 Proposed Grading and Drainage, C2.4.1 Site Details and C2.4.2 Utility Details;
8. David H. Dunlap Associates, Inc. Plan Set - (6) full size and (11) 11x17 sets including sheets SP-1 Landscape and Lighting, SP-2 Parking Lot Lighting, A-1 Ground Floor Plan, A-2 First Floor Plan, A-3 Second Floor Plan, A-4 Third Floor Plan, A-5 Accessory Building Plan, A-6 Exterior Elevations;
9. Drainage Calculations – 2 stamped original sets;

Please note that the Planning Board waived the filing fee for this matter at its meeting of May 12, 2020, minutes attached in the prior zoning and planning decisions.

Thank you for your attention.

La Tanzi
Spaulding
& Landreth

8 Cardinal Lane
Orleans

14 Center Street, Suite 4
Provincetown

3010 Main Street, Suite 2E
Barnstable

Very truly yours,

Benjamin E. Zehnder

BEZ/
cc via email only:

Charleen Greenhalgh, Town Planner
Client
David Michniewicz
Matt Nelson

RECEIVED
OCT 13 2020
TOWN CLERK
Town of Harwich,
Mass.

La Tanzi
Spaulding
& Landreth

8 Cardinal Lane
Orleans

14 Center Street, Suite 4
Provincetown

3010 Main Street, Suite 2E
Barnstable

**Benjamin E. Zehnder**
Direct Tel: 508.255.2133 ext. 128
bzehnder@latanzi.com

October 22, 2020

Anita N. Doucette, Town Clerk
Harwich Town Hall
732 Main Street
Harwich, MA 02645 Via hand delivery

Re: Planning Board Application PB2020-06
328 Bank Street, Harwich / Map 41, Parcel N4

Dear Ms. Doucette:

Please find enclosed for filing the following submittals to the Harwich Planning Board for Site Plan Review and a use Special Permit, for the above property:

1. Amended Narrative – 2 copies;
2. Coastal Engineering Plan replacement Sheet C.2.2.1 Revision Date 10-21-2020 – (2) full size and (11) 11x17 sheets;
3. David H. Dunlap Associates, Inc. replacement sheets A-1, A-2, A-3, A-4 and A-5 – Revision Date 10-19-2020 -

Thank you for your attention.

Very truly yours,

Benjamin E. Zehnder

BEZ/
cc via email only:
Charleen Greenhalgh, Town Planner
David Michniewicz, Client, Matt Nelson

# TOWN OF HARWICH PLANNING DEPARTMENT

**PLANNING BOARD APPLICATION**
**SPECIAL PERMITS & SITE PLAN REVIEW** **FORM A**

**TO THE TOWN CLERK, HARWICH, MA** **DATE** October 13, 2020

## PART A – APPLICANT INFORMATION/AUTHORIZATION

| | |
|---|---|
| Applicant Name(s) | The Royal Apartments LLC<br>8 Alton Place, Brookline, MA 02446 |
| Representative/Organization<br>**(Who will serve as the primary contact responsible for facilitating this application?)** | Benjamin E. Zehnder<br>La Tanzi, Spaulding & Landreth |
| Mailing address | P.O. Box 2300 |
| Town, ST, Zip | Orleans, MA 02653 |
| Phone | (508) 255-2133 ext. 128 |
| Fax | (508) 255-3786 |
| E-mail | bzehnder@latanzi.com |

The applicant is one of the following: *(please check appropriate box)*
☒ Owner ☐ Prospective Buyer* ☒ Representative for Owner/Tenant/Buyer*
☐ Tenant* ☐ Other*_____

***Written permission of the owner(s) and a municipal lien certificate (where applicable) is required.***

All other forms and information as required in the Harwich Code Chapter 400, Rules and Regulations, shall be submitted as part of this application.

### Authorization

Your signature hereby asserts, to the best of your knowledge, that the information submitted in this application is true and accurate; that you agree to fully comply with the Town of Harwich Zoning By-laws and the terms and conditions of any approval of this application by the Planning Board; and authorizes the Members of the Planning Board and/or Town Staff to visit and enter upon the subject property for the duration of the consideration of this application.

10/13/20

Applicant

Owner(s) – Authorization must accompany application if the owner is not the applicant.

*Official use only:*

| PLANNING DEPARTMENT | TOWN CLERK |
|---|---|
| Case # | |

## PART B – PROJECT LOCATION

| | | | |
|---|---|---|---|
| Legal Street Address | 328 Bank Street | Village/Zip Code | 02645 |
| Title Book/Page or L.C.C. # | B.C.R.D. Book 32263, Page 179 / Plan Book 389, Page 98 | | |
| Map(s) / Parcel(s) | Harwich Assessor's Map 41 Parcel N4 | | |
| Zoning & Overlay Districts | MRL; Harwich Center Overlay | *Historic? | Harwich Center Historic Dist. |
| Frontage (linear feet) | 42,403 | | |
| Total land area (s.f.) | 82,443 | | |
| Upland (s.f.) | 71,444 | Wetlands (s.f.) | 10,999 |

## PART C – PROJECT DESCRIPTION

| | | |
|---|---|---|
| Existing Floor Area in Sq. Ft | Gross: | Net: |
| Proposed Floor Area in Sq. Ft | Gross: | Net: |
| Change in Sq. Ft + / - | Gross: 0 | Net: 0 |
| Existing # of parking spaces | Proposed # of parking spaces: 43 | |
| Existing Use(s) | former nursing home / assisted living & senior day care | |
| Proposed Use(s) *Attach a separate narrative if necessary.* | Multifamily use containing 26 units. | |

The undersign hereby files an application with the Harwich Planning Board for the following special permits as proposed under the provisions of the Harwich Zoning Code: (***check all that apply***)

**Site Plan Review § 325-55:**

☐ Any floor area expansion of any structure or expansion of exterior space, other than parking, serving any of the following: commercial, industrial, multi-family or educational use or personal wireless service facility or the creation of a drive-up or drive-through window

☒ Expansion or reconfiguration of an existing parking lot and/or driveway(s) serving said parking lot.

☒ Establishment of any new commercial, industrial, multi-family, educational, fast food/take out restaurant or personal wireless service facility.

☐ Establishment of any new retail use(s) in the Industrial (IL) Zone.

☐ Waiver of Site Plan § 325-55.F

**Article V, Use Regulations:**

☐ Paragraph_____, sub-paragraph #_____ ☐ Paragraph_____, sub-paragraph #_____

☐ Paragraph_____, sub-paragraph #_____, supplemental regulation #_____ § 325-14

**Article X, Special Permits:**

☐ Structures w/ gross floor area of 7,500+ s.f. § 325-51

☐ Structures requiring 20 or more new parking spaces § 325-51

☐ Accessory Apt./Shared Elderly Housing § 325-51.H ☐ Mixed Use § 325-51.M

☐ Drinking Water Resource Protection § 325-51.C ☐ Two Family § 325-51.N

☐ Village Commercial, Harwich Port § 325-51.L ☐ *Harwich Center Overlay § 325-51.O

☐ Signage § 325-27.F Additional Cluster, Excess SF, Non-entry Facades

**Other Special Permits:**

☐ Six Ponds Special District - Article XVI

☐ Wind Energy Systems - Article XVIII ☐ Large Scale Wind Generation – Article XIX

☒ Other (i.e. Alternate Access § 325-18.P, Special Cases § 325-44.B) Multifamily Dwelling s. 325-51(Q)

☐ Repetitive Petition (MGL Ch 40A, §16): Proposed project evolved from a previously denied plan submitted to the Planning Board on _____Year/Case # _____

**Note: Projects within the Harwich Center Overlay District may also be within the Harwich Center Historic District. This requires separate filing with the Historic District and Historical Commission. Please inquire for forms and instructions.*

*September 2011*

BZ

Owner Authorization

328 Bank Street
Assessor's Parcel ID 41-N4
The Royal Apartments LLC
Application for Planning Board Site Plan Approval and Special Permit

---

The Royal Apartments LLC hereby authorizes Benjamin E. Zehnder and La Tanzi, Spaulding & Landreth, LLP to prosecute all necessary applications before the Town of Harwich Planning Board for development of the property at 328 Bank Street, Harwich, MA.

October 12, 2020

Matthew Newman, Manager



BZ

# AMENDED - List of Waiver Requests

328 Bank Street
Assessor's Parcel ID 41-N4
The Royal Apartments LLC
Application for Planning Board Site Plan Approval and Special Permit

---

*November 24, 2020* *Prepared by Benjamin E. Zehnder / La Tanzi, Spaulding & Landreth*

Pursuant to Harwich Town Code §400-6 applicant The Royal Apartments LLC requests the following waivers from the requirements Harwich Town Code §400-16(B)(1)(a) and Apendix 4:

1. Filing Fee – Waiver was approved by the Planning Board at its meeting of May 12, 2020.
2. Variance Notations on Plan – Copies of variances and special permits provided in application package.
3. Existing Driveways within 100 feet of site – The site plan shows existing driveways across Parallel and Bank Streets from locus. Showing driveways within 100 feet would require significant increase in the scale of the plan and there is no proposed increase in traffic.
4. Lighting – The applicant requests a waiver of the requirement to show lighting on the existing buildings as there are no changes proposed.
5. Freestanding Signs – The applicant has not determined the location of signage and will conform all signage to the sign bylaw.
6. Parking Area Setback Requirements - The applicant requests that the Planning Board waive parking area setback requirements set forth in Bylaw § 325-42L pursuant to the Boards right to waive such setbacks as set forth in Bylaw § 325-51.O(5)(F).

END

State Tax Form 290
Certificate: 380
Issuance Date: 10/09/2020

MUNICIPAL LIEN CERTIFICATE
TOWN OF HARWICH - LIVE DATA
COMMONWEALTH OF MASSACHUSETTS

Requested by LATANZI, SPAULDING & LANDRETH, ATTYS

I certify from available information that all taxes, assessments and charges now payable that constitute liens as of the date of this certificate on the parcel of real estate specified in your application received on 10/09/2020 are listed below.

DESCRIPTION OF PROPERTY

Parcel ID: 41/N4-R

328 BANK ST

THE ROYAL APARTMENTS LLC
8 ALTON PL UNIT 5
BROOKLINE MA 02446

| | | |
|---|---|---|
| Land area | : | 1.89 AC |
| Land Value | : | 412,300 |
| Impr Value | : | 1,085,300 |
| Land Use | : | 0 |
| Exemptions | : | 0 |
| Taxable Value | : | 1,497,600 |

Deed date: 08/30/2019 Book/Page: 32263/179
Class: 0100-GENL

| FISCAL YEAR | 2021 | 2020 | 2019 |
|---|---|---|---|
| DESCRIPTION | | | |
| COMMUNITY PRESERVATION ACT | $196.11 | $392.22 | $480.35 |
| REAL ESTATE TAX | $6,537.03 | $13,074.05 | $16,011.76 |
| TOTAL BILLED: | $6,733.14 | $13,466.27 | $16,492.11 |
| Charges/Fees | $.00 | $.00 | $.00 |
| Abatements/Exemptions | $.00 | $.00 | -$1,039.02 |
| Payments/Credits | -$3,366.57 | -$13,466.27 | -$15,453.09 |
| Interest to 10/09/2020 | $.00 | $.00 | $.00 |
| TOTAL BALANCE DUE: | $3,366.57 | $.00 | $.00 |

NOTE: Actual 2021 taxes not yet issued.

| | |
|---|---|
| OTHER UNPAID BALANCES: | |
| 2021 UTILITY BILLING | $125.62 |
| TOTAL OTHER UNPAID BALANCES: | $125.62 |

IF CHECKED, contact Treasurer's Office at 508-430-7501 for update
[ ] This property is in TAX TITLE.
[ ] This property has a BETTERMENT.
[ ] This property has a DEFERRAL.
[ ] This property is currently EXEMPT.

Amy Bullock

AMY BULLOCK
TOWN COLLECTOR/TREASURER

THIS FORM APPROVED BY THE COMMISSIONER OF REVENUE

41-N4

# DECISION

## #79-17

On Tuesday, May 29, 1979, the Harwich Board of Appeals heard the appeal of Eleanor L. Stevens, 23 Snow Inn Road, Harwich Port, MA, 02646. The Petitioner, who is the owner of the property at Bank and Parallel Streets, Harwich, MA, 02645, known as the Old Harwich Inn, sought a continuation of a non-conforming use in the name of Forrest A. Eaton, Jr. and Gregory Y. Winston to allow the "Inn" to be restored for the purpose of renting ten (10) rooms, serving breakfast and retail sale of antiques. Under Table 1, Use Regulations, such uses are prohibited in an MRL Zone.

The Board found the following:

1. The property in question has a history as an Inn, Lodging House, Guest House, etc., dating back to the 19th century;

2. Petitioner plans to rent rooms, serve breakfast and sell antiques;

3. The Building will be restored as closely as possible to the way it was in its early history.

In consideration of all the evidence in this case the Board voted unanimously to grant the relief on the grounds that in a renovated state, the property would be an asset to the Town as well as to the petitioner. Further, the Board saw no evidence that this relief would be a derogation from the intent of the By-Law since in fact the proposed use would be the asset referred to above.

Extension to non-conforming use granted.

Members present and voting:

John L. Roche
Walter Hemeon
William Jussila
George Vagenas
Ernest Elge

HARWICH BOARD OF APPEALS

John L. Roche

Chairman

DECISION

#83-39

On October 25, 1983, the Harwich Board of Appeals heard the Petition of Gregory Winston, 328 Bank Street, Harwich, Mass., by his Attorney, Howard C. Cahoon, Jr., Old Colony Road, Harwich, Mass. 02645. The Petitioner, who is the owner of the Bank Street property as shown on Assessors' Map 41-N4 sought an extension of a non-conforming use to allow the construction of an apartment on the third floor of the premises at 328 Bank Street, Harwich, Ma., and/or a variance from the Harwich Protective By-Laws, Section VI, Paragraph D, Sub-paragraph 14 and Paragraph F to allow habitation on the third floor and a variance from Section V, Table 1, Use Regulations, Paragraph 1, Sub-paragraph 2, to allow a second kitchen on the premises. The approval of the Board of Appeals is required in the granting of an extension of a non-conforming use and a variance.

In the evidence taken in this case, the Board found:

1. The building in question has a long history as a lodging guest house;

2. The Petitioner has done a considerable amount of renovation since purchasing the property;

3. The Petitioner has approval to rent to ten (10) people, and his clients are elderly men and women;

4. The proposed apartment would be for the Petitioner's private use.

In consideration of all of the evidence, the Board voted unanimously to grant the variance on the grounds that the building is unique because of its history as a lodging/guest house. The Petitioner faces undue hardship if denied the chance to enjoy much needed privacy in his own home. Further, the Board saw no evidence that the granting of this variance would be a detriment. In fact, the Board found that the entire project, under Mr. Winston's supervision, is an asset to the community. There was no evidence that the granting of this variance would derogate from the intent of the By-Law since the use of the third-floor apartment is for Gregory Winston, personally, and in the event of the sale of the property, the approval of the use ceases.

Variance granted with condition noted.

Members present and voting: John L. Roche, Walter Hemeon, Eleanor Tobey, Alice Dalzell, and John Ferreira.

HARWICH BOARD OF APPEALS

John L. Roche

Dr. John L. Roche, Chairman

DECISION

#84-55

On October 30, 1984, the Hrwich Board of Appeals heard the petition of Gregory Winston, 328 Bank Street, Harwich, MA. The Petitioner, who is the owner of the above property, as shown on Assessors' Map 41-N4, sought an extension of a non-conforming use to allow the construction and rental of eight (8) bedrooms, four (4) of which have adjoining living rooms.

In the evidence taken in this case, the Board found:

1. The property in question is non-conforming since it fails to have the required setback from a road;

2. Without kitchen facilities, the proposed project is not classified as multi-family.

In consideration of all the evidence in this case, the Board voted unanimously to grant the extension to a non-conforming use on the grounds that the evidence did not suggest that the extended use would be substantially more detrimental than the present use.

Extension to non-conforming use granted.

HARWICH BOARD OF APPEALS

John L. Roche

Dr. John L. Roche, Chairman

TOWN OF HARWICH
RECEIVED
NOV 7 1984
TOWN CLERK
MASS.

HEARING #85-52

The petition of Gregory Y. Winston, 328 Bank Street, Harwich, MA 02645. The petitioner who is the owner of the property as shown on Assessor's Map 41, Parcel N-4 seeks an extension of a non-conforming use to allow eight units to have efficiency kitchens at the Winstead Retirement Center under By-Law Section X, Paragraph J. In the alternative, the petitioner seeks a variance under Section VI Paragraph 13 to accomplish the same. The approval of the Board of Appeals is required in the granting of an extension of a non-conforming use or a variance.

Mr. Winston was represented by Attorney Richard Cain. Mr. Cain told the Board that Mr. Winston has owned and operated the Winstead Retirement Center since 1979. His client is asking the Board's approval to add eight extremely small, executive-type kitchenettes to eight of sixteen new units to be added to the Retirement Center, thus the Winstead Retirement Center might now be considered a multi-family unit. Mr. Cain emphatically stated to the Board that the need for such kitchen facilities, although very compact in nature with no accessory appliances, such as dishwashers, microwaves and the like, is more emotional than a need or necessity as the proposed facilities meet the emotional needs of senior citizens transferring from their homes to retirement center lifestyles. Winstead, Cain went on to say, is senior citizen group living with an excellent community life aspect.

The attorney told the Board his client is seeking an extension to a non-conforming use because the proposed additions do not vary the facility from guest house status to multi-dwelling facility. The Retirement Center has extremely good relations with its neighbors in the area and Mr. Winston has no plans to sell this property in the near future.

Building Inspector: Mr. Lovinsky stated that a dwelling unit that can be used separately falls under zoning for multi-family dwelling. This he felt would be a multi-family dwelling with kitchen and a Variance for this would be necessary to be obtained from the Board. Bradgate, a proposed Condominium, was previously granted a Variance for multi-family use.

Town Officials: Freeman Allison, Selectman, felt that "a kitchen is a kitchen" and also felt that Mr.Winston should come before the Board for a Variance.

‡ No one spoke in favor of the petition.

George Cavanaugh, an attorney for Bradgate Condominiums, spoke in opposition to the project. He stated that Winstead is a multi-family use and if this project were allowed, Bradgate would still have the right to build 70 Condominium units.

There was no correspondence.

Board Member John Ferreira felt that the substantial amount of space devoted to appliances would be installed in the units. Philip Lindquist, architect for the project, stated that appliances would be of necessity extremely small (i.e. 9 cubic foot refrigerator, two-burner stove, tiny sink) as Mr. Winston wants to retain control of what takes places in his units. The units are only a symbol of independence to the residents of Winstead, nothing more than the means by which residents could partake of a small snack or a very light breakfast. Chairman Jussila wanted to know who controls meals at the Center, Mr. Winston replying that Winstead offers a full meal service and he would welcome restrictions on the kitchens if the Board so desired. He is asking for the kitchenettes, so to speak, to wean individuals from a home lifestyle to a retirement center lifestyle.

Freeman Allison again told the Board that a Variance was necessary and the Planning Board's past opposition to the project re density.

Sara Ayer moved that petition be granted for non-conforming use, adding that in addition to her work with the elderly, she felt that seniors moving from home to the center still needed to retain some type of independence and most retirement centers offer some adjunct to their main kitchen facilities.

DECISION #85-52

On October 29, 1985, the Harwich Board of Appeals voted unanimously to allow Gregory Y. Winston, 328 Bank Street, Harwich, MA 02645 to withdraw Petition #85-52 without prejudice.

HARWICH BOARD OF APPEALS

William J. Jussila

William J. Jussila, Chairman

TOWN OF HARWICH
RECEIVED
NOV 1 2 1985
TOWN CLERK
MASS.

Dean Derby approved of the petition for non-conforming use so long as restrictions were placed on the use of small appliances in them. Walter Hemeon stated that the Board has a legal obligation to protect the property abutting Winstead, namely Bradgate Condominiums.

Chairman Jussila suggested meeting with Town Counsel Falla to resolve this problem and return for next month's meeting. He preferred tabling the motion until October when the Board was able to receive Town Counsel Falla's opinion as to what legally constites a kitchen.

On motion by Walter Hemeon, seconded by Sara Ayer, it was the unanimous vote of the Board to table the motion until the October meeting.

TOWN OF HARWICH

DECISION

1986-30

On June 25, 1986, the Harwich Board of Appeals held a public hearing on the petition of Gregory V. Winston, [illegible] Bank Street, Harwich, MA 02645, as shown on Assessor's map 41, parcel N4 who sought an extension of a non-conforming structure to add to an existing third floor bedroom.

After the hearing, the Board made the following findings:

1. The addition has already been completed.

2. The addition is to a [illegible] story bedroom of the original structure.

3. Access to the addition is only through the original structure that is only [illegible] stories.

4. The addition in question is the same as the addition the Board gave permission to construct last year so that the Petitioner could enlarge existing rooms on the original structure.

Based on the facts found, the Board voted 4 to 0 to grant the extension to a non-conforming structure.

Members voting in favor:

Peterson, Hemeon, Ferriera,
Jussila

Abstaining:
Ayer

Harwich Board of Appeals

William J. Jussila

William J. Jussila, Chairman

TOWN OF HARWICH
JUL 9 1986
TOWN CLERK

The Board of Appeals met in the meeting room of Brooks Academy Building, Sisson Road, Harwich, [illegible], on June [illegible], 1986 to hear the appeal of the following:

6.30 Gregory Y. [illegible]ston. Property owned at 78 Bank Street, Harwich, MA, 02645. Petition is for extension of nonconforming structure. Pictures of the existing structure were presented. Petitioner wants to add to an existing third floor bedroom.

This is an unique situation in that the addition can be seen as either a second or third floor level. From Bank Street, it appears to be a second floor room. From another, it may be seen as level with a third floor addition built last summer, with a building permit granted by this Board.

The original house is one of two levels, on which this bedroom was added. However, later additions were of three levels. The question is whether this bedroom is part of the original building.

Roger Peterson questioned if the entrance to the bedroom was on Bank Street, where it is two levels. Mr. [illegible]ston replied that it was.

Thomas Lovinsky, Building Inspector, stated that without the new addition, the bedroom would be allowable, because it would not appear as three levels. He, himself, had gone by the house a few times without noticing this. The confusion was whether it was part of the old or new house.

Sara Ayer asked if access to the room was from the old house only. The response was yes. She interpreted the situation for clarification that the room was part of the original house on the second floor, and the only access is from the original house.

The hearing was closed at 8:00 p.m. by the chairman.

A motion was made and seconded to approve the extension. There was a 4-0 vote in favor, with Sara Ayer abstaining.

TOWN OF HARWICH
JUN 9 1986

FILE COPY

Royal Health Group
8 Lewis Point Road • Buzzards Bay, Massachusetts 02532 • Tel 508 759-5752 • Fax 508 759-3628

October 25, 2005

OCT 26 2005

Mr. Jeff Larson
Building Inspector
Town of Harwich
732 Main Street
Harwich, MA 02645

Re: Royal at Harwich Village
328 Bank St. Harwich
Dear Mr. Larson:

This letter is to confirm the following details. The property located at 328 Bank Street now known as The Royal; was earlier know as the Winstead. As the Winstead; the prior owners of the property were most recently licensed to operate an Assisted Living Facility. This was confirmed to us in writing by the Town of Harwich; Banknorth: and the Commonwealth of Massachusetts, Office of Elder Affairs. As you may be aware; Banknorth (Cape Cod Bank); had foreclosed on the property and operated it for a period of almost two years; subsequently closing the property prior to our acquisition. Prior to our occupancy, we installed a fire suppression system throughout the entire building. The facility was licensed for a capacity of up to 41 residents; and to the best of our knowledge every unit in the building was licensed for occupancy and at one time or another was occupied by elderly clients. The total occupancy permit was corroborated by the septic system certification. The particular unit in question, known today as the penthouse and occupying the third floor above ground level; will be occupied by no more than two residents at a time. Under separate cover, we are providing to your office a floor plan with a maximum occupancy by unit for the entire facility.

I swear that the above statements are true and correct to the best of my knowledge.

Signed and sworn before a Notary Public on this 25th day of October, in the year 2005; County of Barnstable, Commonwealth of Massachusetts.

SS: _____
James S. Mamary, CEO
Royal Assisted Living, LLC

Notary Public: _____
Peter L. LeBrun

My Commission expires:

Peter L. LeBrun
NOTARY PUBLIC
My commission expires Apr. 5, 2007

RECEIVED
DEC 16 1998
TOWN CLERK
Town of Harwich, Mass.

**TOWN OF HARWICH**
**BOARD OF APPEALS**
**DECISION**

**PETITION NO.:** 98-80

**FILED WITH TOWN CLERK:** 02-17-1999 @ 02:47

**HEARING DATE:** December 2, 1998

**PETITIONER:** Gregory Y. Winston
328 Bank Street
Harwich, MA 02645

**OWNER:** Gregory Y. Winston and David Plunkett
328 Bank Street
Harwich, MA 02645

**PROPERTY:** 113, 109 and 118 Parallel Street, Harwich, MA, shown as Parcels N4, N3-A and D1-1 on Assessor's Map 41

The Petitioner requested a Special Permit under Section X, Paragraph J of the Zoning By-Law and Variances from Section V, Paragraph B, Table 1 (Use Regulations) and Section IX, Subsections A through C, including Table 4, (Off-Street Parking Regulations) of the Zoning By-Law to change, extend or alter pre-existing nonconforming structures, parking and uses at 113, 109 and 118 Parallel Street known as The Winstead Retirement and Elderly Day Care Center from a thirty (30) unit inn/retirement facility with a forty (40) seat dining room to an inn/hotel, restaurant and tavern use with 31 guest rooms, a forty (40) seat tavern on the first level and a one hundred (100) seat restaurant on the second level, with eighty-one (81) outdoor parking spaces and six (6) garage spaces. Twenty-six (26) outdoor parking spaces to the west of the present day care center building will not be constructed until the restaurant and tavern are in use. All parking is to be located on all three parcels. The request is herein referred to as the "Project".

Members of the Board present:

William J. Jussila, Chairman; John B. Ferreira; George Cavanaugh; Christopher Hemeon; and Donna Peterson.

Notice of the hearing has been given by sending notice thereof to the Petitioner and all those owners of property deemed by the Board to be affected thereby and as required by statute,



5

and that public notice of such hearing has been given by publication in the Cape Cod Chronicle. The hearing was opened on December 2, 1998.

The following appeared in person or through correspondence in favor of the Petition:

Myer R. Singer, Attorney for the Petitioner; Gregory Y. Winston; and numerous people ho spoke in support of the Project. A petition signed by more than seventy (70) people was presented in support of the Project.

The following appeared in opposition or with questions regarding the Petition:

A lady appeared on behalf of a Mr. Nickerson with a question regarding the potential for late night noise as a result of the Project.

The Petitioner presented the following information and the Board finds the following as facts in support of its decision.

113 and 109 Parallel Street are located in the MR-L Zoning District. 118 Parallel Street is located in the C-V Zoning District. 109 Parallel Street is a nonconforming lot that is improved with one structure containing a nonconforming residential duplex. 113 Parallel Street is improved with two structures and is currently used as The Winstead Retirement and Day Care Center, which are nonconforming uses. 118 Parallel Street on the north side of the street, is improved with a retail sales building and is nonconforming as to its front yard setback.

The Petitioner desires to have a destination resort in Harwich Center by changing the use of the existing buildings located at 113 Parallel Street from a thirty (30) unit inn/retirement facility with a forty (40) seat dining room and day care center to an inn/restaurant and tavern use containing thirty-one (31) guest rooms, a forty (40) seat tavern on the first level and a one hundred (100) seat restaurant on the second level of the building. Parking with a total of 92 spaces for the Project will be located on all three parcels that comprise the Property. The Project includes remodeling the structures on 113 Parallel Street, revising the parking areas and access driveways on all three parcels and upgrading all three Parcels. The Project will be constructed in two (2) or more phases and the Petitioner seeks permission to not construct the 26 parking spaces to the west of the present day care center building until the restaurant and tavern are in use. The two (2) family house will remain at 109 Parallel Street and the antique shop will be an upscale Antique and Inn Shop with plumbing and bathroom.

The physical alteration to the exterior of the principal structure will not be substantially more detrimental to the neighborhood because the only exterior change will be the addition of an awning and entrance on Parallel Street. Moving the entrance from Bank Street which is more heavily traveled then Parallel Street is seen as positive rather than detrimental. The shop at 118 Parallel Street will be upgraded with a new roof and it and the daycare center building will be painted and rehabilitated to the extent needed.



RECEIVED
DEC 16 1998
WN CLERK
of Harwich,
Mass.

The interior changes at the day care center building will be to remodel it into three guest units. The retirement center building will be a tavern on the first or lower level, a restaurant and guest units on the second or street level and guest units in the remainder of the building. The parking at 118 Parallel Streets is conforming and permitted in the commercial zone.

The parking at 113 Parallel Street is nonconforming but will remain substantially screened from view because it will be behind the buildings and at a lower grade than the road. Most of the parking at 109 Parallel Street will be new but will also be substantially screened from view. This parking will not be built until the restaurant and tavern use open.

The remodeled buildings will meet all applicable building and safety code requirements. In-lot and buffer vegetation and screening will be provided as shown on the plans. The Project will result in increased traffic. However, the site will be a destination resort and with the available amenities at and within walking distance of the Inn, the guest units at the Inn are not expected to have a significant traffic impact. With the restaurant, swimming pool and Inn shop, people will be encouraged to stay at the Inn. With additional antique and other stores in the area, as well as the Library, tennis courts, Brooks Academy, band concerts and White House Field with public activities, the Inn guests are more likely to stay and relax in a revitalized Harwich Center.

The tavern and restaurant will also result in traffic but less than most similar facilities. With the potential of package programs and ambiance of the Inn many Inn guests will also be the restaurant guests without increasing traffic. Also, the nature of the service is not expected to be attractive to persons seeking a quick, casual meal and therefore frequent short stops are not expected. The tavern tables will be set with white linen table cloths. It will be a place to come and relax in a quiet atmosphere rather than have an upbeat and contemporary atmosphere.

The change will have a positive effect on Harwich Center and not be detrimental.

Based on all of the above reasons, the Board determined that the change of uses and the building alterations will not be substantially more detrimental to the neighborhood than the existing, nonconforming uses. This will be particularly true because the Property will be physically improved — building, parking, lighting, septic and landscaping.

The Board of Appeals, after giving due consideration to the facts and information presented, is satisfied that the Special Permit requested can be granted in conformity with the Town of Harwich Zoning By-Law and the General Laws of the Commonwealth of Massachusetts.

Variances are needed for parking on 109 Parallel Street and to have fewer parking spaces than required. A literal enforcement of the provisions of the Zoning By-Law will deny the Applicant the opportunity to rehabilitate the Property and will result in a substantial hardship to the Applicant and the surrounding neighborhood.

RECEIVED
DEC 16 1998
TOWN CLERK
Town of Harwich,
Mass.

The main building has been devoted to a particular use. Due to changes in the assisted living community on the Cape, continued operation of the Retirement and Day Care Center have become uneconomical.

113 Parallel Street was first an inn and dining establishment in 1913 as the New Winslow Hotel started by Sam Ellis. Thereafter it was owned by a Perry family and called the Harwich Inn. For a period in the 1940's and 1950's, when the Hall family owned the property, rooms were rented out to actors in play groups, summer league baseball players and employees of local restaurants. For a period in the late 1960's and 1970's the property was a dormitory for Snow Inn employees.

The Inn building, the Day Care Center and the land adjoining and across the street from them are all unique for the area, have a special setting in the area and have limited value for single family houses. Enforcement of the Zoning By-law requiring a single family use when it has been used for transient guests for 85 years would be a hardship on the owner.

The requested variances will not cause any substantial detriment to the public good nor substantially derogate from the overall intent of the Zoning By-Law because the property will be maintained for its historic use. Those buildings in need of remodeling will receive it, the "antique" shop will be made useful with new plumbing and bathroom facilities, an in Town resort with transportation to the beach will benefit the area, property values will be enhanced and the public protected from potential deterioration.

Based on the above reasons, the Board finds that the requested variances will neither cause any substantial detriment to the public good nor nullify or substantially derogate from the overall intent and purpose of the Zoning By-Law. The site changes will provide a benefit to the community and will help revitalize Harwich Center. The Town is in need of lodging and accommodations and a fine dining restaurant. The site upgrade will benefit all three parcels and the neighborhood. The Project as proposed will not adversely affect the public health, safety, convenience or general welfare of the Town. Parking will be safe and adequate. Landscaping will be attractive and well-maintained.

The Board of Appeals, after giving due consideration to the facts and information presented, is satisfied that the criteria for the issuance of the requested Variances under both the Town of Harwich Zoning By-Law and the General Laws of the Commonwealth of Massachusetts have been met by the Petitioner.

The Board members discussed whether a Variance was necessary in order to change the buildings. The Board determined that the requested Special Permit for the change of a nonconforming use and structures was adequate and that the requested Variance was not necessary. At the request of the Petitioner, it was moved and unanimously voted in favor of the request to withdraw without prejudice for so much of the Variance request as was not decided.

RECEIVED
DEC 16 1998
TOWN CLERK
Town of Harwich,
Mass.

Christopher Hemeon moved to grant a Special Permit and Variances as applied for and presented at the hearing. After discussion, the Board voted to grant the Special Permit under Section X, Paragraph J of the Harwich Zoning By-Law to change, extend or alter the pre-existing nonconforming structures and pre-existing nonconforming uses and parking, and the Petitioner's request for Variances from Section V, Paragraph E, Table I (Use Regulations) and Section IX, subsections A through C, including Table 4 (Off Street Parking Regulations).

Members of the Board voting in favor:

William J. Jussila, Chairman; John E. Ferreira; George Cavanaugh; Christopher Hemeon; and Donna Peterson.

Members of the Board voting in opposition:

None.

Therefore, by a vote of five (5) in favor and zero (0) opposed, the Petitioner's request for a Special Permit under Section X, Paragraph J of the Harwich Zoning By-Law to change, extend or alter the pre-existing nonconforming structures and pre-existing nonconforming uses and parking, and the Petitioner's request for Variances from Section V, Paragraph E, Table I (Use Regulations) and Section IX, subsections A through C, including Table 4 (Off Street Parking Regulations) are granted.

No permit shall issue until 20 days from the date of filing the decision with the Town Clerk.

William J. Jussila, Chairman

#98-80

CERTIFICATION OF TOWN CLERK:

I, Anita Doucette, Town Clerk, Town of Harwich, do hereby certify that 20 days have elapsed since the filing with me of the above Board of Appeals Decision No. 98-80 and that no notice of appeal of the decision has been filed with me, or if such appeals has been filed, it has been dismissed or denied.

Anita Doucette, Town Clerk

RECEIVED DEC 16 1998 TOWN CLERK Town of Harwich, Mass.

FEB 17 1999



BARNSTABLE REGISTRY OF DEEDS

To: BOS

To: Ms. M. Eldredge Health Director; Ms. C. Greenhalgh and Planning Board: Zoning Board; BOS (care of Ms. S. Delaney

From: Alan C. Wirsul 2 Englewood Dr. Harwich Ma 908 239-1287

Subject: Royal Apartments, LLC Toxic Building materials in Structures Built prior to 1978-homes and Children occupied facilities. Federal Toxic Substances Control Act (TSCA) Section IV And Office of Chemical Safety and Pollution Prevention (OCSPP)

Dear Folks:

With regards to the Royal Oaks Apts. There is at least one structure on the property that dates back to the 1800's and where Toxic Building Materials were more than likely used (ie Lead and asbestos/Mesithelioma) and I would like to focus this writing to lead. Why? Local Governments do not focus on this subject until children are found with elevated harmful lead blood levels of lead and its too late. You wish an example, one need only look to Marthas Vineyard and the US Coast Guard Personnel who have young children found with harmful High levels of lead in government provided housing, reported only 2 weeks ago. What is even more interesting is that protocol testing was conducted and did not detect the levels of lead, most probably because the equipment used to measure could not detect the levels of lead most probably due to how the samples were taken or the equipment used to measure the appropriate restricted quantities. Please also find a short note on asbestos which I am sure you are aware of.

Please note that the Federal Office of Chemical Safety and Pollution Control (OCSPP) have taken important steps to further protect children from exposure to lead contaminate dust. The Royal Oaks Apts. certainly falls under these possible circumstances. And these regulations far supersede an MA. EPA Regulations.

Why you might ask? Lead is a soft metal and a potent neurotoxin with *no known safe exposure thresholds according to the US National Library of Medicine.* Lead is particularly harmful to the development of children brains, but can also have a variety of deleterious effects on people of all ages. It is especially important to note that elevated harmful levels of lead can show up in children's blood after only 2 years of living conditions. The consumer Product Safety commission, in 1977, limited lead in most paints to be at 0.06% (600ppm) by dry weight. Since 2009, the allowable lead level was reduced to 0.009%. Now the OCSPP and Federal EPA have lowered dust-lead Hazard standards on floors to 40 micrograms of lead per square foot (UG/ft2 ) *Who will the future occupants be in the Royal Oak Apts.?*

These are facts which cannot be disputed. Should the Town of Harwich have an obligation to impose a lead inspection and a risk assessor to Royal Oaks for any variance granted? Should there be an obligation to have a plan in place to abate interior level of lead paint (LBP) Obviously, the office of OCSPP has taken these steps to be certain that a place like the Royal Oaks Apts. are suitable of young children habitation by families with young children. Federal Regulations go far beyond the meer chipping of paint and have placed much tighter standards for lead. For Example, and as demonstrated

above in the presentation, **OCSPP is very concerned about lead dust** and frequently finds it a common occurrence on floors, in window sills, and believe it or not soils surrounding aged structures.

In conclusion, ***might I suggest that the Town Harwich pay close attention to the OCSPP newly established standards for Royal Oaks LLC Apts.*** **for lead and not to be neglected asbestos.** It is well known that Asbestos, as long as it is encapsulated and not brought out to dust levels, it can be contained. However again, any asbestos incorporated in structures **prior to 1980, should assume that asbestos is present and handled properly with "interior reconstruction" in aged building like at least part of the Royal Oaks LLC Apts.**

RECEIVED
FEB 18 2020
SELECTMEN / ADMINISTRATOR'S OFFICE

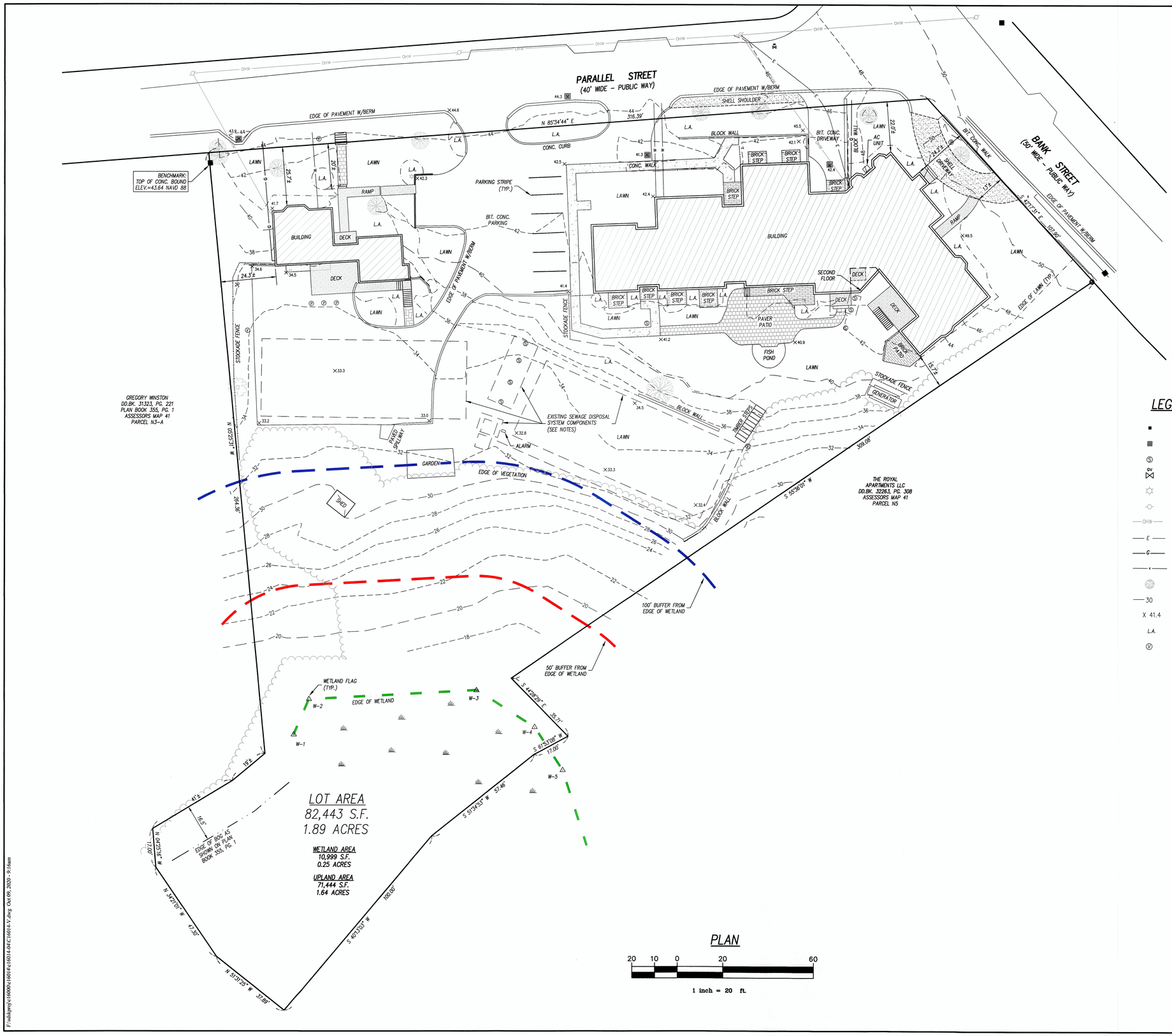


MASS. COORD. SYSTEM NAD 1983 MAINLAND ZONE

## PLAN

20 10 0 20 60

1 inch = 20 ft.

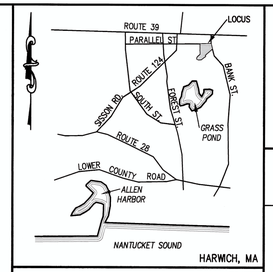


## KEY MAP

NO SCALE

## LEGEND

- BOUND
- CATCH BASIN
- SEWER MANHOLE
- GAS VALVE
- LIGHTPOST
- UTILITY POLE
- OVERHEAD UTILITY LINE
- UNDERGROUND ELECTRIC LINE
- GAS LINE
- FENCE
- TREE
- 30 CONTOUR
- X 41.4 SPOT GRADE
- L.A. LANDSCAPED AREA
- SEPTIC VENT

## REFERENCES:

ASSESSORS MAP 41, PARCEL N4

DEED BOOK 32263, PAGE 179
PLAN BOOK 389, PAGE 98

ZONING CLASSIFICATION:
MULTI FAMILY RESIDENTIAL LOW DENSITY (MR-L)

HARWICH CENTER OVERLAY DISTRICT

HARWICH CENTER HISTORIC DISTRICT

## DATUM NOTE:

ELEVATIONS SHOWN HEREON ARE BASED ON THE NORTH AMERICAN VERTICAL DATUM 1988 (NAVD 1988)

## NOTES

1. EXISTING SEWAGE DISPOSAL SYSTEM COMPONENTS SHOWN HEREON ARE FROM ON THE GROUND "AS-BUILT" LOCATION PERFORMED BY COASTAL ENGINEERING COMPANY, INC (DEC. 2003).

## UTILITY NOTES:

1. EXISTING UTILITIES, INCLUDING DRAINAGE FACILITIES, HAVE BEEN SHOWN WHENEVER POSSIBLE AND ARE SHOWN AS APPROXIMATE FROM EXISTING RECORDS. THE CONTRACTOR SHALL VERIFY THE LOCATION OF ALL EXISTING UNDERGROUND AND OVERHEAD UTILITIES PRIOR TO COMMENCEMENT OF ANY WORK. ANY DAMAGE TO EXISITNG UTILITIES SHALL BE THE CONTRACTOR'S RESPOSIBILITY AND ANY EXPENSE BORNE BY THE CONTRACTOR.
2. EXISTING UTILITIES, UNDERGROUND AND OVERHEAD, MAY EXIST IN ADDITION TO THE UTILITY INFORMATION SHOWN ON THESE PLANS.
3. CONTRACTOR SHALL NOTIFY ALL UTILITIES PRIOR TO EXCAVATION.
4. CONTRACTOR SHALL NOTIFY "DIG-SAFE" AT 1-800-344-7233 PRIOR TO ANY EXCAVATION. LOCATIONS OF WATER, SEWER, ELECTRIC AND GAS ARE APPROXIMATE AND FOR REFERENCE ONLY. CONTRACTOR SHALL INSPECT SITE AND FOLLOW ALL DIG-SAFE MARKINGS.

I HEREBY CERTIFY THAT THE CONDITIONS SHOWN HEREON ARE LOCATED AS THEY EXISTED ON THE GROUND AS OF 10-24-19.

DATE 10/09/2020

P.L.S. JOHN D. McELWEE

COMMONWEALTH OF MASSACHUSETTS
JOHN D. McELWEE
No. 33602
PROFESSIONAL LAND SURVEYOR


COASTAL engineering co.
260 Cranberry Hwy, Orleans, MA 02653
508.255.6511 P 508.255.6700 F


| NO. | DATE | REVISION | BY |
|---|---|---|---|
| 2 | 10-9-2020 | ADD SECTION OF SIDE WALK | CEM |
| 1 | 1-6-2020 | ADD SUPPLEMENTARY UTILITY LOCATIONS | CEM |

SEAL

PROJECT
ROYAL APARTMENTS, LLC
328 BANK STREET HARWICH, MA

SHEET TITLE
PLAN SHOWING EXISTING SITE CONDITIONS

| | |
|---|---|
| SCALE | AS NOTED |
| DRAWING FILE | C16014-V.dwg |
| DATE | ~~10-31-19~~ |
| DRAWN BY | JLH |
| CHECKED BY | JDM |

# C1.1.1

1 OF 1 SHEETS

PROJECT NO. C16014.04

Coastal Engineering Co., Inc. © 2020

F:\dskproj\c16000s\16014\c16014-V.dwg, Oct 09, 2020 - 9:16am

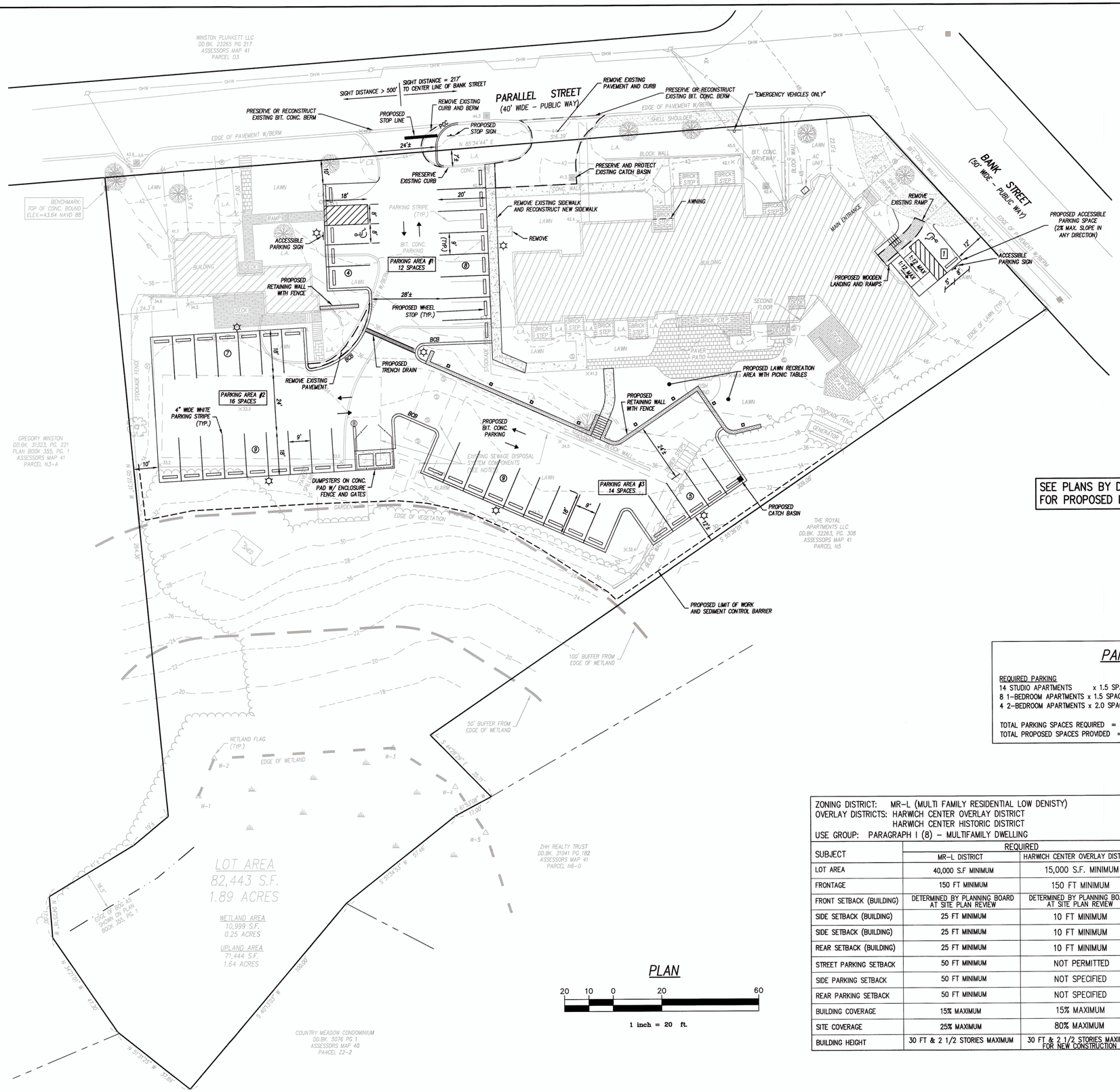


PLAN

20 10 0 20 60

1 inch = 20 ft.

MASS. COORD. SYSTEM NAD 1983 MAINLAND ZONE

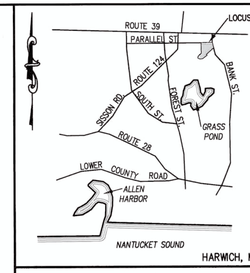


KEY MAP
NO SCALE

SEE PLANS BY D.H. DUNLAP ASSOCIATES, INC. FOR PROPOSED LIGHTING AND LANDSCAPING

## PARKING TABLE

REQUIRED PARKING
14 STUDIO APARTMENTS x 1.5 SPACES/UNIT = 21 SPACES
8 1-BEDROOM APARTMENTS x 1.5 SPACES/UNIT = 12 SPACES
4 2-BEDROOM APARTMENTS x 2.0 SPACES/UNIT = 8 SPACES

TOTAL PARKING SPACES REQUIRED = 41 SPACES
TOTAL PROPOSED SPACES PROVIDED = 43 SPACES (INCLUDING 2 ACCESSIBLE SPACES)

ZONING DISTRICT: MR-L (MULTI FAMILY RESIDENTIAL LOW DENISTY)
OVERLAY DISTRICTS: HARWICH CENTER OVERLAY DISTRICT
HARWICH CENTER HISTORIC DISTRICT
USE GROUP: PARAGRAPH 1 (8) – MULTIFAMILY DWELLING

| SUBJECT | REQUIRED | | EXISTING | PROPOSED |
|---|---|---|---|---|
| | MR-L DISTRICT | HARWICH CENTER OVERLAY DISTRICT | | |
| LOT AREA | 40,000 S.F MINIMUM | 15,000 S.F. MINIMUM | 82,443 S.F. | NO CHANGE |
| FRONTAGE | 150 FT MINIMUM | 150 FT MINIMUM | 424.3 FT | NO CHANGE |
| FRONT SETBACK (BUILDING) | DETERMINED BY PLANNING BOARD AT SITE PLAN REVIEW | DETERMINED BY PLANNING BOARD AT SITE PLAN REVIEW | 22.0 FT | NO CHANGE |
| SIDE SETBACK (BUILDING) | 25 FT MINIMUM | 10 FT MINIMUM | 15.7 FT (EAST) | NO CHANGE |
| SIDE SETBACK (BUILDING) | 25 FT MINIMUM | 10 FT MINIMUM | 24.3 FT (WEST) | NO CHANGE |
| REAR SETBACK (BUILDING) | 25 FT MINIMUM | 10 FT MINIMUM | >250 FT | NO CHANGE |
| STREET PARKING SETBACK | 50 FT MINIMUM | NOT PERMITTED | 7.0 FT | NO CHANGE |
| SIDE PARKING SETBACK | 50 FT MINIMUM | NOT SPECIFIED | 10.0 FT | NO CHANGE |
| REAR PARKING SETBACK | 50 FT MINIMUM | NOT SPECIFIED | 182.0± FT | 175.0± FT |
| BUILDING COVERAGE | 15% MAXIMUM | 15% MAXIMUM | 10.7% (8,834 S.F.) | NO CHANGE |
| SITE COVERAGE | 25% MAXIMUM | 80% MAXIMUM | 25.8% (21,318 S.F.) | 48.0% (39,536± S.F.) |
| BUILDING HEIGHT | 30 FT & 2 1/2 STORIES MAXIMUM | 30 FT & 2 1/2 STORIES MAXIMUM FOR NEW CONSTRUCTION | EXISTING | NO CHANGE |

## REFERENCES:

ASSESSORS MAP 41, PARCEL N4

DEED BOOK 32263, PAGE 179
PLAN BOOK 389, PAGE 98

## OWNER:

ROYAL APARTMENTS LLC
8 ALTON PLACE
BROOKLINE, MA 02446

## APPLICANT:

ROYAL APARTMENTS LLC
8 ALTON PLACE
BROOKLINE, MA 02446

## DATUM NOTE:

ELEVATIONS SHOWN HEREON ARE BASED ON THE NORTH AMERICAN VERTICAL DATUM 1988 (NAVD 1988)

## NOTES

1. EXISTING SEWAGE DISPOSAL SYSTEM COMPONENTS SHOWN HEREON ARE FROM ON THE GROUND "AS-BUILT" LOCATION PERFORMED BY COASTAL ENGINEERING COMPANY, INC (DEC. 2003).
2. THE EXISTING SEWAGE DISPOSAL SYSTEM HAS A PERMITTED DESIGN FLOW OF 4,773 GPD WHICH IS GREATER THAN THE PROPOSED DESIGN FLOW OF 3,300 GPD (30 BEDROOMS AT 110 GPD)
3. THE EXISTING SEWAGE DISPOSAL SYSTEM COMPONENTS BENEATH PARKING AREAS ARE DESIGNED FOR VEHICLE LOADS.

## LEGEND

### EXISTING

- BOUND
- CATCH BASIN
- SEWER MANHOLE
- GAS VALVE
- LIGHTPOST
- UTILITY POLE
- OHW — OVERHEAD UTILITY LINE
- x — FENCE
- TREE
- 30 — CONTOUR
- X 41.4 — SPOT GRADE
- L.A. — LANDSCAPED AREA

### PROPOSED

- CONTOUR
- +41.4 — SPOT GRADE
- CATCH BASIN
- AREA DRAIN
- BCB — BITUMINOUS CONCRETE BERM
- PCC — PRECAST CONCRETE CURB
- VEHICLE TRAVEL DIRECTION (NOT PAINTED)
- BOLLARD
- TRAFFIC SIGN
- LIGHT POLE

COASTAL engineering co.
260 Cranberry Hwy, Orleans, MA 02653
508.255.6511 P 508.255.6700 F

| NO. | DATE | REVISION | BY |
|---|---|---|---|
| 3 | 10-21-2020 | CHANGE APARTMENT UNIT MIX AND REVISE PARKING TABLE | CEM |
| 2 | 10-9-2020 | REVISIONS FOR NEW ZONING BYLAW REGULATIONS | CEM |
| 1 | 1-6-2020 | EDITS TO ADDRESS TOWN PLANNER'S COMMENTS | CEM |

SEAL

COMMONWEALTH OF MASSACHUSETTS
DAVID J. MICHNIEWICZ
CIVIL
NO. 31903
REGISTERED PROFESSIONAL ENGINEER

JOHN J. MORRISSEY
NO. 33802
REGISTERED PROFESSIONAL LAND SURVEYOR

PROJECT
ROYAL APARTMENTS, LLC
328 BANK STREET
HARWICH, MA

SHEET TITLE
PLAN SHOWING PROPOSED SITE LAYOUT AND MATERIALS

SCALE: AS NOTED
DRAWING FILE: C16014.04-C.dwg
DATE: ~~12-5-2019~~
DRAWN BY: CEM
CHECKED BY: DJM

# C2.1.1

__ OF __ SHEETS

PROJECT NO. C16014.04

Coastal Engineering Co., Inc. © 2020

F:\SDSK\PROJ\C16000\C16014\C16014.04\C16014.04-C.dwg Oct 21, 2020 - 9:58am

## DRAINAGE TEST HOLE LOGS

NO SCALE

DATE OF TESTS : DECEMBER 2, 2019

WITNESSED BY : JOHN SCHNAIBLE, CEC

DRAINAGE TEST HOLE 1 EL. = 41.2±

| DEPTH FROM SURFACE | SOIL HORIZON | SOIL TEXTURE |
|---|---|---|
| 0" – 13" | A | TOPSOIL |
| 13" – 33" | B | SUBSOIL |
| 33" – 132" | C | MED TO COARSE SAND (LOOSE) |

NO GROUNDWATER ENCOUNTERED

DRAINAGE TEST HOLE 2 EL. = 32.6±

| DEPTH FROM SURFACE | SOIL HORIZON | SOIL TEXTURE |
|---|---|---|
| 0" – 18" | A | TOPSOIL |
| 18" – 36" | B | SUBSOIL |
| 36" – 120" | C | MED TO COARSE SAND (LOOSE) |

NO GROUNDWATER ENCOUNTERED

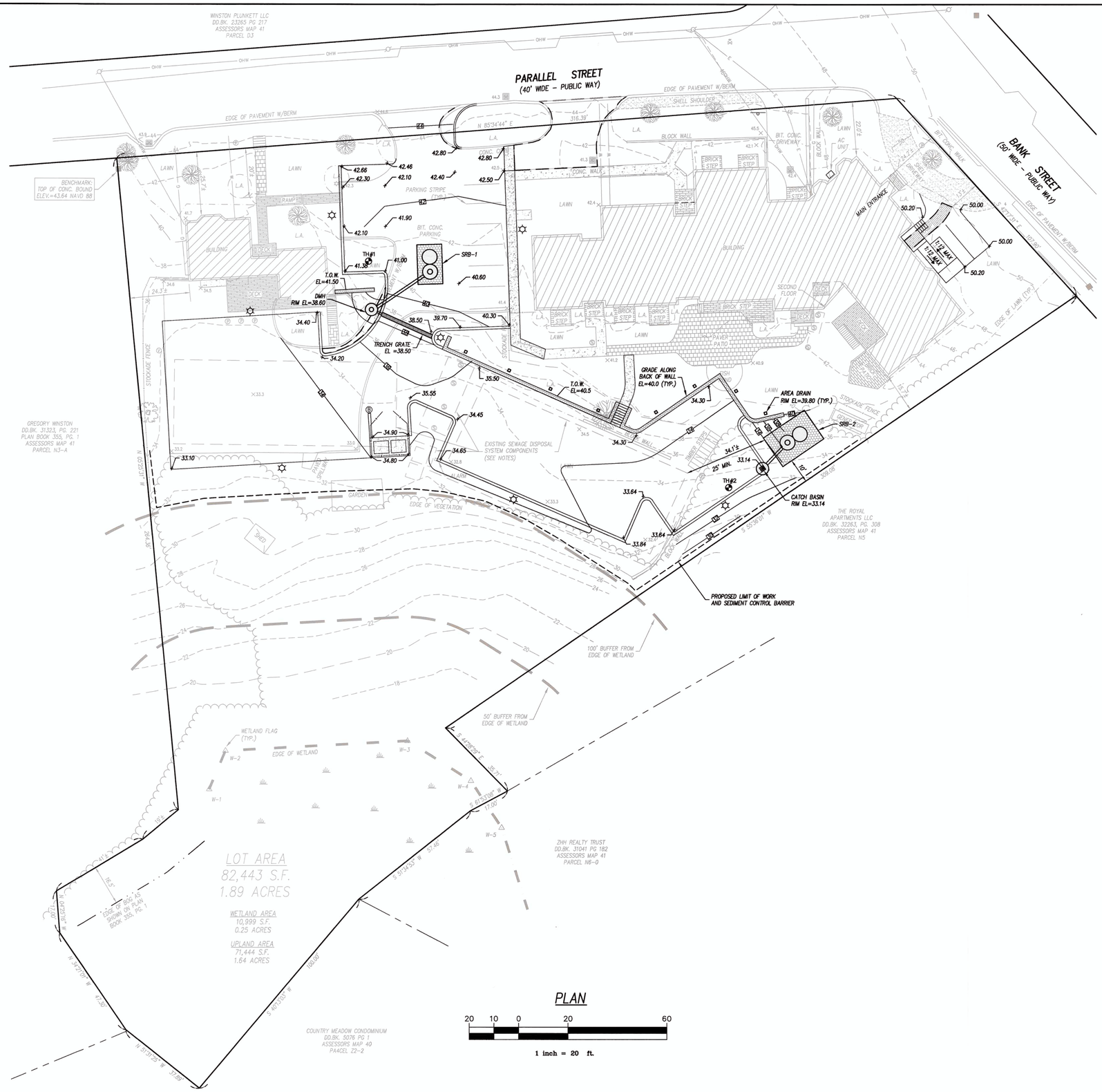


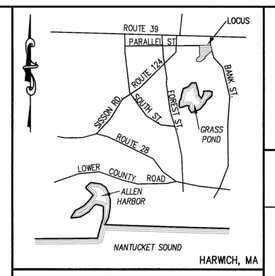


KEY MAP
NO SCALE

## REFERENCES:

ASSESSORS MAP 41, PARCEL N4

DEED BOOK 32263, PAGE 179
PLAN BOOK 389, PAGE 98

## OWNER:

ROYAL APARTMENTS LLC
8 ALTON PLACE
BROOKLINE, MA 02446

## APPLICANT:

ROYAL APARTMENTS LLC
8 ALTON PLACE
BROOKLINE, MA 02446

## DATUM NOTE:

ELEVATIONS SHOWN HEREON ARE BASED ON THE NORTH AMERICAN VERTICAL DATUM 1988 (NAVD 1988)

## NOTES

1. EXISTING SEWAGE DISPOSAL SYSTEM COMPONENTS SHOWN HEREON ARE FROM ON THE GROUND "AS-BUILT" LOCATION PERFORMED BY COASTAL ENGINEERING COMPANY, INC (DEC. 2003).
2. THE EXISTING SEWAGE DISPOSAL SYSTEM HAS A PERMITTED DESIGN FLOW OF 4,773 GPD WHICH IS GREATER THAN THE PROPOSED DESIGN FLOW OF 4,730 GPD (43 BEDROOMS AT 110 GPD)

## LEGEND

### EXISTING

- BOUND
- CATCH BASIN
- SEWER MANHOLE
- GAS VALVE
- LIGHT POLE
- UTILITY POLE
- OHW — OVERHEAD UTILITY LINE
- FENCE
- TREE
- 30 — CONTOUR
- X 41.4 — SPOT GRADE
- L.A. — LANDSCAPED AREA

### PROPOSED

- 30 — CONTOUR
- 35.00 — SPOT GRADE
- CATCH BASIN
- AREA DRAIN
- TH#1 — DRAINAGE TEST HOLE
- SRB — STORMWATER RECHARGE BASIN
- BOLLARD
- LIGHT POLE


COASTAL engineering co.
260 Cranberry Hwy, Orleans, MA 02653
508.255.6511 P 508.255.6700 F


| NO. | DATE | REVISION | BY |
|---|---|---|---|
| 2 | 10-9-2020 | REVISIONS FOR NEW ZONING BYLAW REGULATIONS | CEM |
| 1 | 1-6-2020 | NO CHANGES TO THIS SHEET | CEM |

SEAL

COMMONWEALTH OF MASSACHUSETTS
DAVID J. MICHNIEWICZ
CIVIL
NO. 31983

JOHN M. CHESSIA
NO. 33602
PROFESSIONAL ENGINEER AND SURVEYOR

PROJECT: ROYAL APARTMENTS, LLC
328 BANK STREET
HARWICH, MA

SHEET TITLE: PLAN SHOWING PROPOSED GRADING AND DRAINAGE

| | |
|---|---|
| SCALE | AS NOTED |
| DRAWING FILE | C16014.04-C.dwg |
| DATE | ~~12-5-2019~~ |
| DRAWN BY | CEM |
| CHECKED BY | DJM |

C2.2.1

__ OF __ SHEETS

PROJECT NO. C16014.04

Coastal Engineering Co., Inc. © 2020

F:\SISK\PROJ\C16000\C16014\C16014-04\C16014.04-C.dwg Oct 09, 2020 - 12:59pm

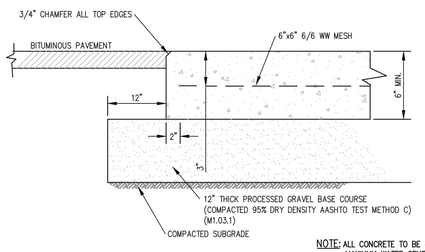


NOTE: ALL CONCRETE TO BE 4,000psi WITH MAXIMUM WATER CEMENT RATIO OF 0.45 AND AIR ENTRAINMENT.

## DUMPSTER PAD

NOT TO SCALE

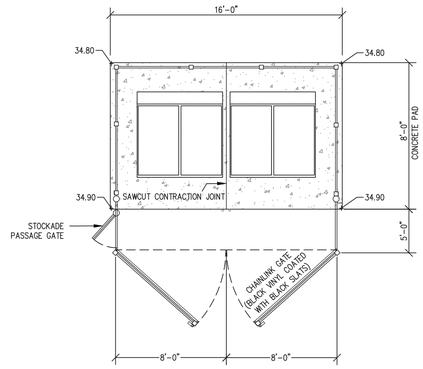


PLAN VIEW

## DUMPSTER PAD AND ENCLOSURE DETAIL

NOT TO SCALE

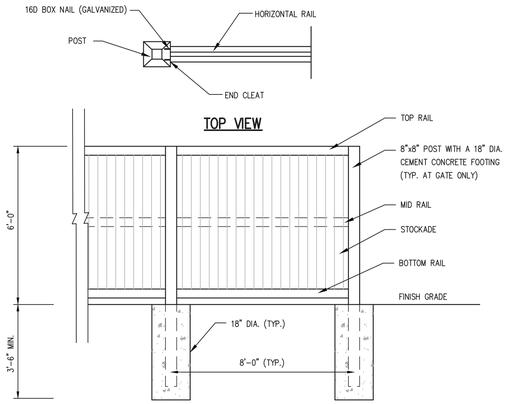


ELEVATION

## 6' HIGH FENCE DETAIL

NOT TO SCALE

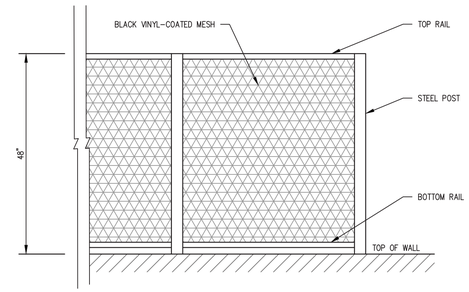


## CHAIN LINK FENCE DETAIL

NOT TO SCALE

(TO BE INSTALLED ON TOP OF NEW RETAINING WALLS)

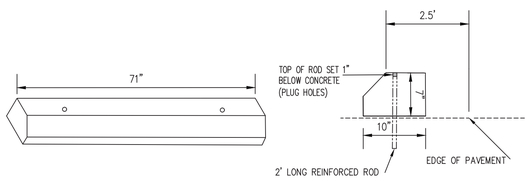


## CONCRETE WHEEL STOP DETAIL

NOT TO SCALE

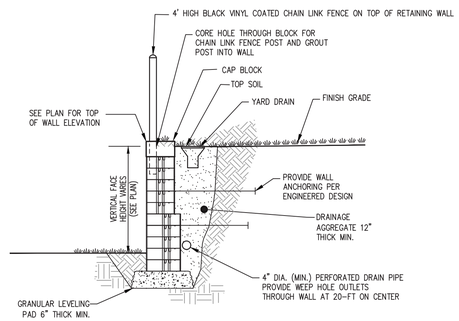


## MODULAR CONCRETE BLOCK RETAINING WALL DETAIL

NOT TO SCALE

NOTE:

1. WALL MATERIALS TO BE INSTALLED IN ACCORDANCE WITH BLOCK MANUFACTURER'S GUIDELINES.
2. CONTRACTOR IS RESPONSIBLE FOR WALL DESIGNED AND PERMIT.
3. CONTRACTOR SHALL PROVIDE STAMPED ENGINEERING CALCULATIONS AND PLANS PRIOR TO START OF CONSTRUCTION.

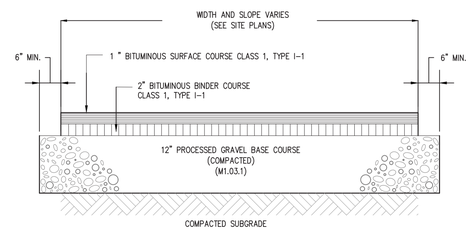


## BITUMINOUS CONCRETE PAVEMENT

NOT TO SCALE

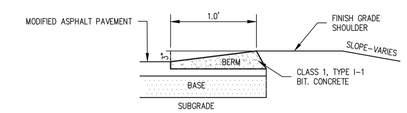


## BITUMINOUS CONCRETE BERM

NOT TO SCALE

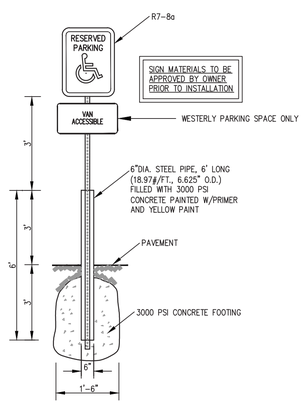


## ACCESSIBLE PARKING SIGN

NOT TO SCALE

NOTE: SYMBOL TO BE PAINTED IN ALL ACCESSIBLE PARKING SPACES.

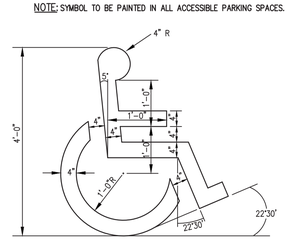


## PAINTED ACCESSIBLE PARKING SYMBOL

NOT TO SCALE

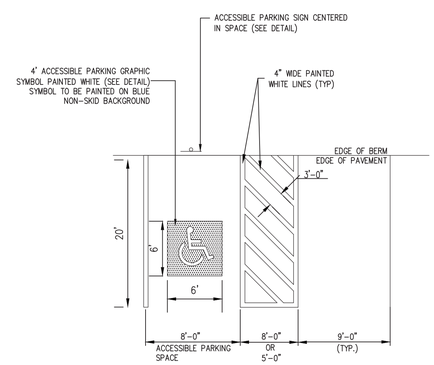


## ACCESSIBLE PARKING SPACE STRIPING

NOT TO SCALE

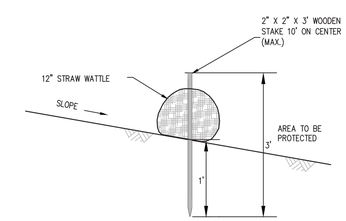


## EROSION CONTROL SEDIMENT BARRIER DETAIL

NOT TO SCALE

COASTAL engineering co.
260 Cranberry Hwy, Orleans, MA 02653
508.255.6511 P 508.255.6700 F

| NO. | DATE | REVISION | BY |
|---|---|---|---|
| 2 | 10-9-2020 | FENCE AND DUMPSTER DETAILS UPDATED | CEM |
| 1 | 1-6-2020 | ADDED BITUMINOUS CONRETE BERM DETAIL | CEM |

SEAL

COMMONWEALTH OF MASSACHUSETTS DAVID J. MICHNIEWICZ CIVIL NO. 31487 REGISTERED PROFESSIONAL ENGINEER

PROJECT: ROYAL APARTMENTS, LLC
328 BANK STREET HARWICH, MA

SHEET TITLE: SITE DETAILS

| | |
|---|---|
| SCALE | AS NOTED |
| DRAWING FILE | C16014.04-C.dwg |
| DATE | ~~12-5-19~~ |
| DRAWN BY | CEM |
| CHECKED BY | DJM |

C2.4.1

__ OF __ SHEETS

PROJECT NO. C16014.04

Coastal Engineering Co., Inc. © 2020

F:\SDSK\PROJ\C16000\C16014\C16014-04\C16014-04-C.dwg Oct 09, 2020 - 1:23pm

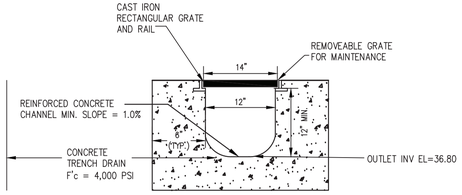


## TRENCH DRAIN DETAIL

(NOT TO SCALE)

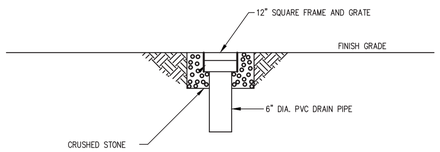


## YARD DRAIN DETAIL

NOT TO SCALE

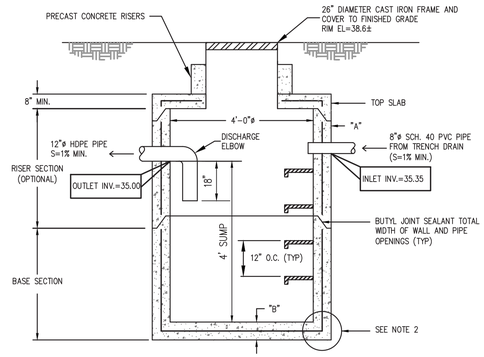


## PRECAST CONCRETE DRAINAGE MANHOLE

NOT TO SCALE

GENERAL NOTES:
1. ALL REINFORCING STEEL MUST CONFORM TO THE LATEST ASTM A185 AND/OR A615 GRADE 60. SEE TABLE 1 FOR STEEL REINFORCEMENT REQUIREMENT.
2. STEEL REINFORCEMENT FOR BASE SECTION BOTTOM SHALL BE A MIN. OF 0.12 SQ. IN/LINEAL FT. (BOTH WAYS).
3. CATCH BASIN SPECS. CONFORM TO THE LATEST ASTM C478 SPEC. FOR "PRECAST REINFORCED CONCRETE MANHOLE SECTIONS".
4. MORTAR SHALL CONFORM TO SECTION M4.02.15 OF THE MASSACHUSETTS D.P.W. STANDARD SPECS. FOR HIGHWAYS AND BRIDGES.
5. STEPS SHALL BE M.A. INDUSTRIES TYPE, STEEL REINFORCED COPOLYMER POLYPROPYLENE PLASTIC.
6. ONE POUR MONOLITHIC BASE SECTION.
7. ANY NECESSARY ADJUSTMENTS DURING CONSTRUCTION WILL BE DONE BY SAW-CUTTING AND/OR CORING ONLY. NO JACKHAMMERS, HAMMERS, CHISELS OR PNEUMATIC TOOLS WILL BE ALLOWED.
8. RED CLAY BRICK SHALL CONFORM WITH SECTION M4.05.2 CLAY BRICK OF MASSACHUSETTS D.P.W. STANDARD SPECS. FOR HIGHWAY AND BRIDGES.

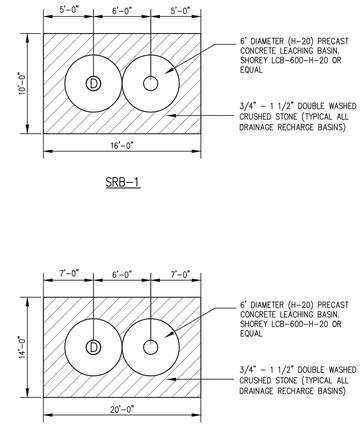


NOTES:
1. FILTER FABRIC & TURF REINFORCEMENT SHALL BE INSTALLED IN STRICT CONFORMANCE WITH MANUFACTURERS SPECIFICATIONS.
2. THE INSTALLER SHALL ASCERTAIN THE LOCATION OF EXISTING UNDERGROUND UTILITIES PRIOR TO EXCAVATION, AND SHALL PROTECT UTILITIES WITHIN THE WORK AREA DURING CONSTRUCTION.
3. LEACHING RECHARGE BASINS SHALL REMAIN OFFLINE UNTIL THE SITE AND ALL VEGETATION HAS BEEN STABILIZED.

## DETAILS OF STORMWATER RECHARGE BASINS

NOT TO SCALE

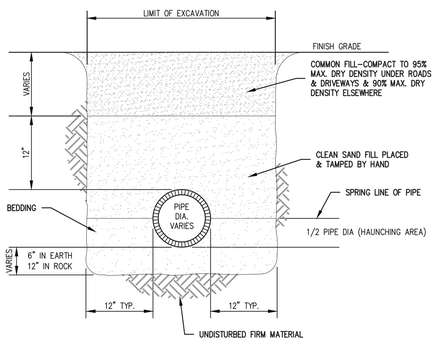


GENERAL NOTES:
1. FINISH GRADE MATERIAL VARIES (SEE SITE PLAN)
2. COMPACT SOIL IN HAUNCHING ZONE TO 65% MAX DRY DENSITY.

## UTILITY TRENCH

NOT TO SCALE

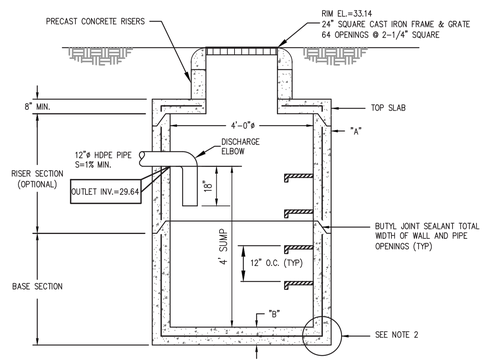


## PRECAST CONCRETE CATCH BASIN

NOT TO SCALE

GENERAL NOTES:
1. ALL REINFORCING STEEL MUST CONFORM TO THE LATEST ASTM A185 AND/OR A615 GRADE 60. SEE TABLE 1 FOR STEEL REINFORCEMENT REQUIREMENT.
2. STEEL REINFORCEMENT FOR BASE SECTION BOTTOM SHALL BE A MIN. OF 0.12 SQ. IN/LINEAL FT. (BOTH WAYS).
3. CATCH BASIN SPECS. CONFORM TO THE LATEST ASTM C478 SPEC. FOR "PRECAST REINFORCED CONCRETE MANHOLE SECTIONS".
4. MORTAR SHALL CONFORM TO SECTION M4.02.15 OF THE MASSACHUSETTS D.P.W. STANDARD SPECS. FOR HIGHWAYS AND BRIDGES.
5. STEPS SHALL BE M.A. INDUSTRIES TYPE, STEEL REINFORCED COPOLYMER POLYPROPYLENE PLASTIC.
6. ONE POUR MONOLITHIC BASE SECTION.
7. ANY NECESSARY ADJUSTMENTS DURING CONSTRUCTION WILL BE DONE BY SAW-CUTTING AND/OR CORING ONLY. NO JACKHAMMERS, HAMMERS, CHISELS OR PNEUMATIC TOOLS WILL BE ALLOWED.
8. RED CLAY BRICK SHALL CONFORM WITH SECTION M4.05.2 CLAY BRICK OF MASSACHUSETTS D.P.W. STANDARD SPECS. FOR HIGHWAY AND BRIDGES.

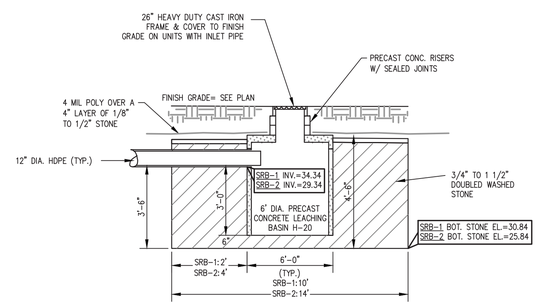


NOTES:
1. ** DRAINAGE RECHARGE STRUCTURES TO BE PLACED IN CLEAN COARSE SAND. CONTRACTOR TO PERFORM A SOIL TEST AND NOTIFY ENGINEER FOR ON SITE INSPECTION OF SOILS PRIOR TO INSTALLATION OF ANY DRAINAGE SYSTEM COMPONENTS. STRUCTURE MAY BE PLACED ABOVE COARSE SAND LAYER PROVIDED CONTRACTOR PERFORMS A 5' SOIL REMOVAL AROUND BASIN DOWN TO THE COARSE SAND HORIZON. REMOVAL TO BE FILLED IN ACCORDANCE WITH NOTE #2 TO TOP OF STRUCTURE. (CONTRACTOR SHALL INCLUDE A UNIT COST FOR REMOVAL AND REPLACEMENT IN THE BID PRICE).
2. FILL MATERIAL FOR SYSTEMS CONSTRUCTED IN FILL SHALL BE CLEAN GRANULAR SAND, FREE OF ORGANIC MATTER AND OTHER DELETERIOUS MATERIALS. THE SAND SHALL BE GRADED SUCH THAT NOT MORE THAN 45% OF THE SAMPLE, BY WEIGHT, SHALL BE RETAINED ON THE #4 SIEVE. THE FILL SHALL NOT CONTAIN ANY MATERIAL LARGER THAN 2 INCHES. THE MATERIAL THAT PASSES THE #4 SIEVE SHALL MEET THE FOLLOWING GRADATION REQUIREMENTS:

| SIEVE SIZE | PERCENT PASSING |
|---|---|
| # 4 | 100% |
| # 50 | 10%-100% |
| # 100 | 0%-20% |
| # 200 | 0%-5% |

## TYPICAL END VIEW OF STORMWATER RECHARGE BASIN

NOT TO SCALE


COASTAL engineering co.
260 Cranberry Hwy, Orleans, MA 02653
508.255.6511 P 508.255.6700 F


| NO. | DATE | REVISION | BY |
|---|---|---|---|
| 2 | 10-9-2020 | MINOR REVISIONS | CEM |
| 1 | 1-6-2020 | NO CHANGES TO THIS SHEET | CEM |

SEAL

COMMONWEALTH OF MASSACHUSETTS
DAVID J. MICHNIEWICZ
CIVIL
NO. 31903

PROJECT
ROYAL APARTMENTS, LLC
328 BANK STREET
HARWICH, MA

SHEET TITLE
UTILITY DETAILS

| | |
|---|---|
| SCALE | AS NOTED |
| DRAWING FILE | C16014.04-C.dwg |
| DATE | ~~12-5-19~~ |
| DRAWN BY | CEM |
| CHECKED BY | DJM |

C2.4.2

__ OF __ SHEETS

PROJECT NO. C16014.04


Coastal Engineering Co., Inc. © 2020



F:\SDSK\PROJ\C16000\C16014\C16014-04\C16014.04-C.dwg Oct 09, 2020 - 1:29pm

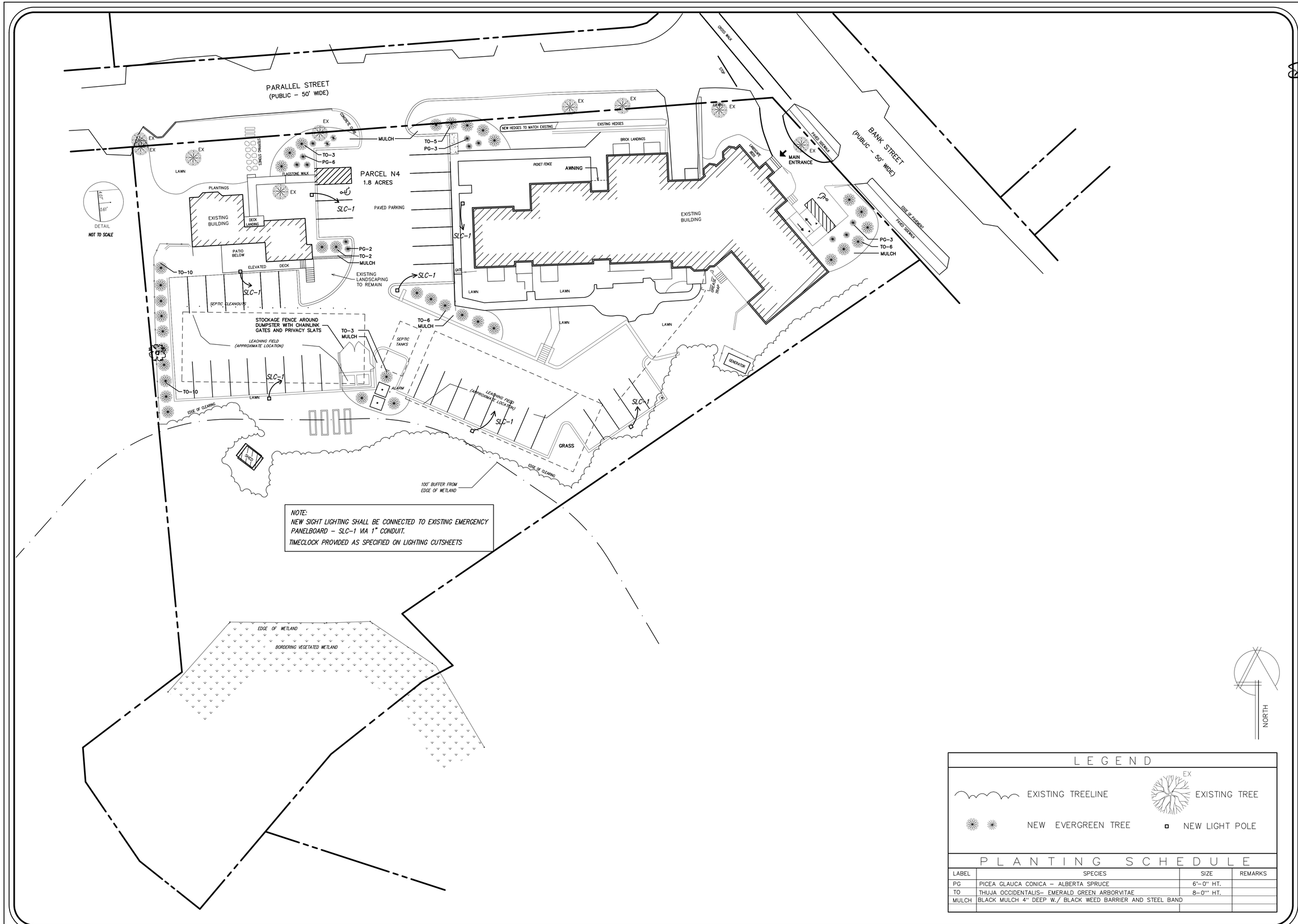


NOTE:
NEW SIGHT LIGHTING SHALL BE CONNECTED TO EXISTING EMERGENCY PANELBOARD – SLC-1 VIA 1" CONDUIT.
TIMECLOCK PROVIDED AS SPECIFIED ON LIGHTING CUTSHEETS

## LEGEND

| | |
|---|---|
| EXISTING TREELINE | EXISTING TREE |
| NEW EVERGREEN TREE | NEW LIGHT POLE |

## PLANTING SCHEDULE

| LABEL | SPECIES | SIZE | REMARKS |
|---|---|---|---|
| PG | PICEA GLAUCA CONICA – ALBERTA SPRUCE | 6'–0" HT. | |
| TO | THUJA OCCIDENTALIS– EMERALD GREEN ARBORVITAE | 8–0"' HT. | |
| MULCH | BLACK MULCH 4" DEEP W./ BLACK WEED BARRIER AND STEEL BAND | | |


David H. Dunlap Associates Inc.
ARCHITECTS * ENGINEERS * PLANNERS
105 WEBSTER STREET UNIT 2
HANOVER, MASSACHUSETTS 02339
PHONE: (781) 878-0066 FAX: (781) 878-7060
email: David@DHDunlap.com



David H. Dunlap Associates, Inc. All Rights Reserved.
No use or reproduction of this record is permitted without the express written consent of David H. Dunlap Associates, Inc.
Do not scale drawing. Use dimensions shown. Verify all dimensions on site.


# LANDSCAPE AND SITE ELECTRICAL PLAN

# Royal Apartments

HARWICH, MA

SCALE: 1" = 20'
DATE: 10/13/20
DR. BY: MCN

SP-1

PATH/NAME: C:\USERS\MATT\DESKTOP\ROYAL PROJECTS\HARWICH\MECH\SITE\ELEC PLOT DATE: 10/13/2020 PLOT TIME: 11:56 AM

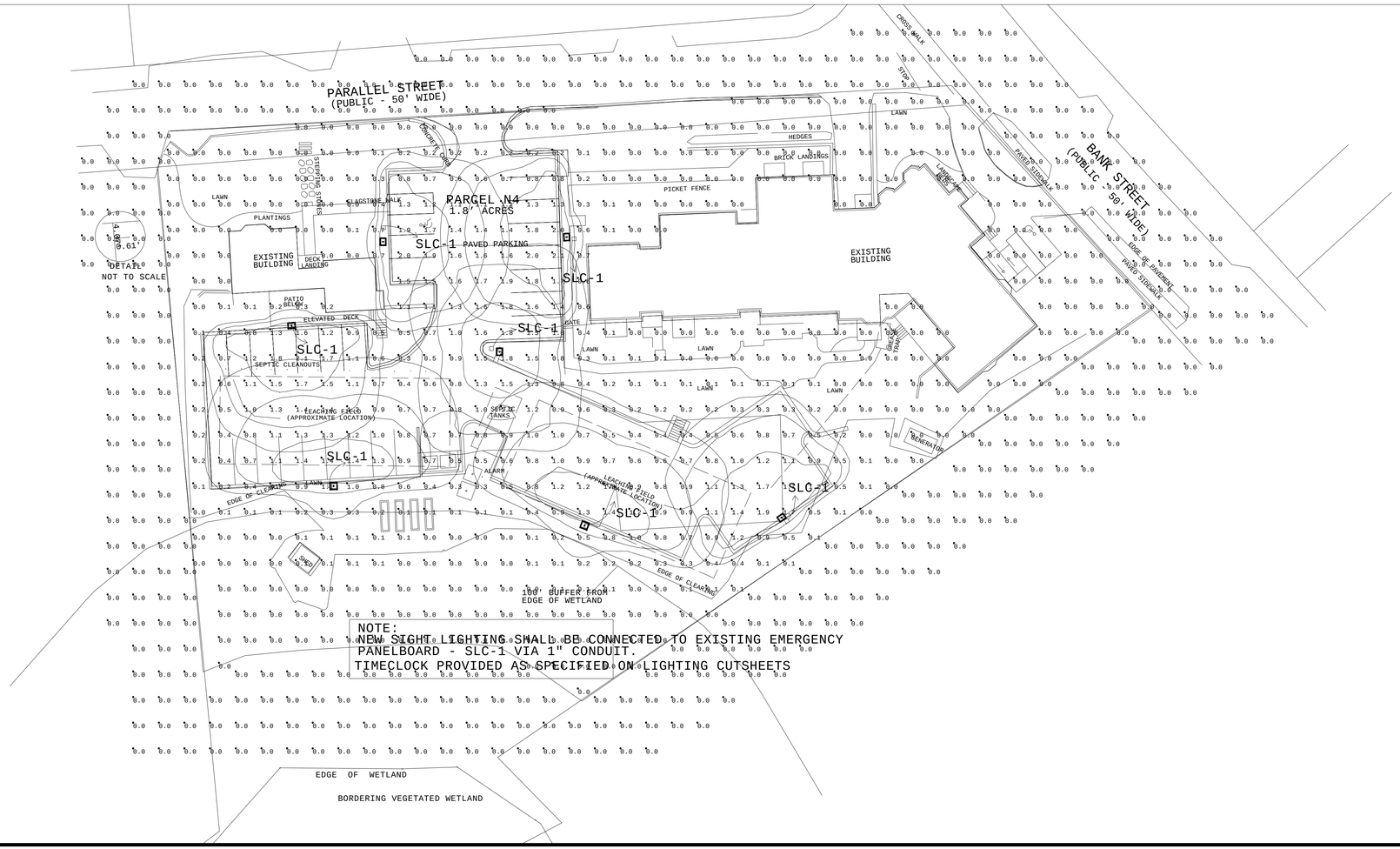


NOTE:
NEW SIGHT LIGHTING SHALL BE CONNECTED TO EXISTING EMERGENCY PANELBOARD - SLC-1 VIA 1" CONDUIT.
TIMECLOCK PROVIDED AS SPECIFIED ON LIGHTING CUTSHEETS

| Luminaire Schedule | | | | | | |
|---|---|---|---|---|---|---|
| Symbol | Qty | Label | Arrangement | Total Lamp Lumens | LLF | Description |
| · | 4 | SL4 BC | SINGLE | N.A. | 0.700 | Beacon VP-S-24L-55-3K7-4-BC-UNV BL SWP SSA B 16 40 B VM2S16 |
| · | 2 | SL4 | SINGLE | N.A. | 0.700 | Beacon VP-S-24L-55-3K7-4W-UNV BL SWP SSA B 16 40 B VM2S16 |
| · | 1 | SL5 | SINGLE | N.A. | 0.700 | Beacon VP-S-24L-55-3K7-5R-UNV BL SWP SSA B 16 40 B VM2S16 |

| Calculation Summary | | | | | | | |
|---|---|---|---|---|---|---|---|
| Label | CalcType | Units | Avg | Max | Min | Avg/Min | Max/Min |
| Site_Planar | Illuminance | Fc | 0.39 | 2.1 | 0.0 | N.A. | N.A. |
| Spill | Illuminance | Fc | 0.00 | 0.0 | 0.0 | N.A. | N.A. |
| Driveways and Parking | Illuminance | Fc | 1.09 | 2.1 | 0.0 | N.A. | N.A. |


REGISTERED ARCHITECT DAVID H. DUNLAP No. 3829 COMMONWEALTH OF MASSACHUSETTS
David H. Dunlap Associates Inc.
ARCHITECTS * ENGINEERS * PLANNERS
105 WEBSTER STREET UNIT 2
HANOVER, MASSACHUSETTS 02339
PHONE: (781) 878-0066 FAX: (781) 878-7060
email: David@DHDunlap.com


# Parking Lot Lighting and Photometric Plan


David H. Dunlap Associates, Inc. All Rights Reserved.
No use or reproduction of this report or portion thereof without the express, written permission of DHDA is permitted.
Do not scale drawing. Use dimensions shown. Verify all dimensions on site.


HARWICH, MA

Royal Apartments

SCALE: 1" = 20'
DATE: 10/13/20
DR. BY: MCN

SP-2


PATHNAME: C:\USERS\MATTA\DESKTOP\Royal Project\HARWICH\MECH\SPOREDSED.ACE PLOT DATE: 10/28/2020 PLOT TIME: 1:06 PM

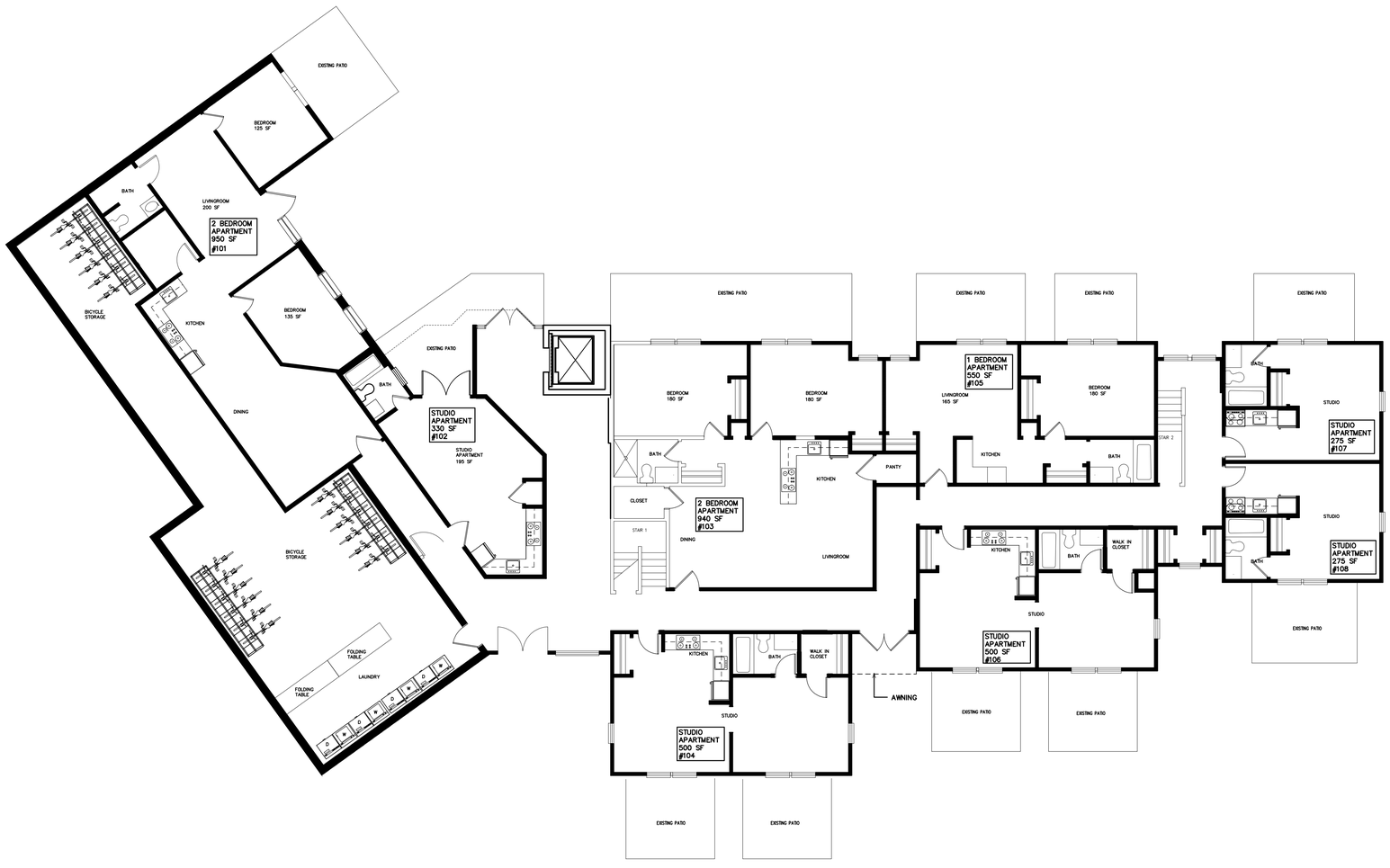


GROUND FLOOR PLAN
1/8"=1'-0"

| APARTMENT MIX CHART | | | | |
|---|---|---|---|---|
| LOCATION | STUDIO | 1 BD RM | 2 BD RM | TOTAL |
| GROUND FLOOR | 5 | 1 | 2 | 8 |
| FIRST FLOOR | 4 | 4 | 1 | 9 |
| SECOND FLOOR | 3 | 1 | 0 | 4 |
| THIRD FLOOR | 0 | 0 | 1 | 1 |
| ACCESSORY | 2 | 2 | 0 | 4 |
| TOTAL | 14 | 8 | 4 | 26 |

NOTE: ALL HABITABLE ROOMS HAVE NO LESS THAN 120 SQUARE FEET FLOOR AREA AND NO MAJOR DIMENSION OF LESS THAN 10 FEET IN COMPLIANCE WITH THE HARWICH ZONING BYLAW SECTION 325-51(Q)(4).


David H. Dunlap Associates Inc.
ARCHITECTS * ENGINEERS * PLANNERS
105 WEBSTER STREET UNIT 2
HANOVER, MASSACHUSETTS 02339
PHONE: (781) 878-0066 FAX: (781) 878-7060
email: David@DHDunlap.com



David H. Dunlap Associates, Inc. All Rights Reserved.
No use or reproduction of this material is permitted without the express written consent of David H. Dunlap Associates, Inc.
Do not scale drawing use dimensions shown. Verify all dimensions on site.


# GROUND FLOOR PLAN

HARWICH MA

Royal Apartments

SCALE: 1/8" = 1'-0"
DATE: 10/19/20
DR. BY: MCN

A-1

PATH/NAME: A:\USERS\MATT\DESKTOP\HARW PROJECTS\HARWICH\ARCHIVES\ARCHIVES ARCHIVES PLOT DATE: 10/19/2020 PLOT TIME: 1:26 PM

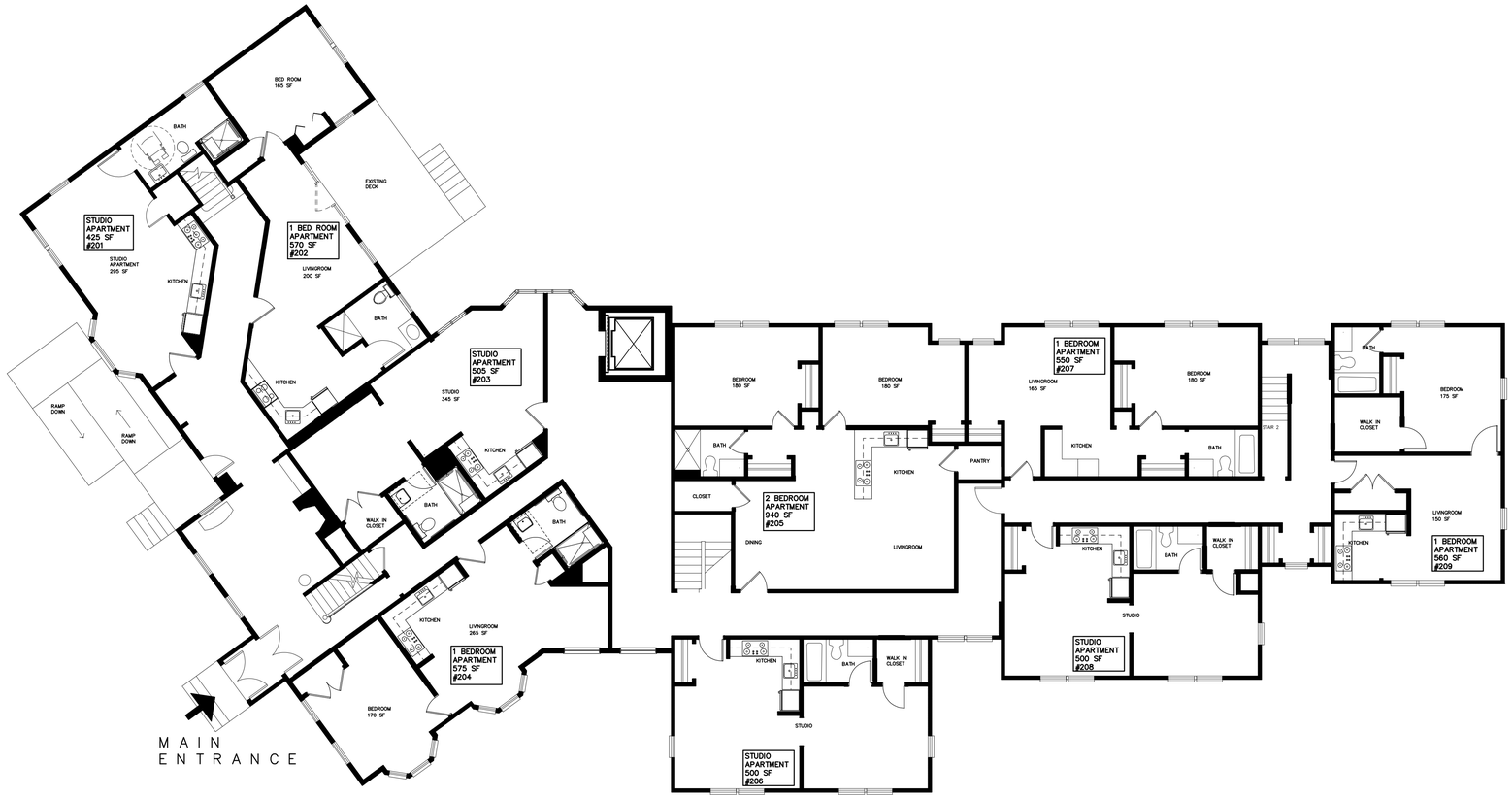


FIRST FLOOR PLAN

1/8"=1'-0"

NOTE: ALL HABITABLE ROOMS HAVE NO LESS THAN 120 SQUARE FEET FLOOR AREA AND NO MAJOR DIMENSION OF LESS THAN 10 FEET IN COMPLIANCE WITH THE HARWICH ZONING BYLAW SECTION 325-51(Q)(4).


David H. Dunlap Associates Inc.
ARCHITECTS * ENGINEERS * PLANNERS
105 WEBSTER STREET UNIT 2
HANOVER, MASSACHUSETTS 02339
PHONE: (781) 878-0066 FAX: (781) 878-7060
email: David@DHDunlap.com



David H. Dunlap Associates, Inc. All Rights Reserved
Other than express written consent of David H. Dunlap Associates, Inc. no one shall make any reproduction, copy or distribute this drawing or otherwise use it.


HARWICH MA

FIRST FLOOR PLAN

Royal Apartments

| | |
|---|---|
| SCALE: 1/8" = 1'-0" | DR. BY: MCN |
| DATE: 10/19/20 | |

A-2

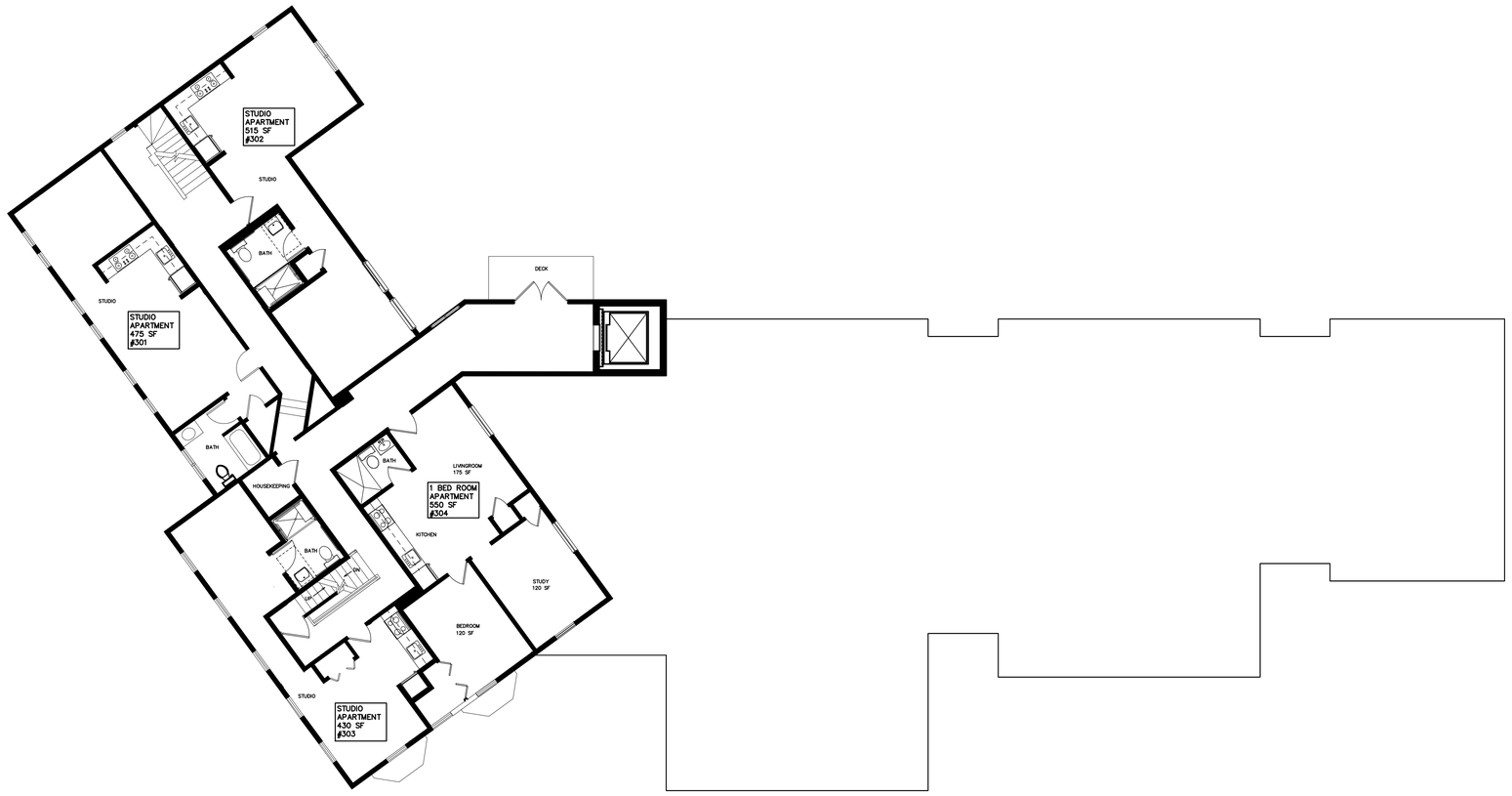


SECOND FLOOR PLAN

1/8"=1'-0"

NOTE: ALL HABITABLE ROOMS HAVE NO LESS THAN 120 SQUARE FEET FLOOR AREA AND NO MAJOR DIMENSION OF LESS THAN 10 FEET IN COMPLIANCE WITH THE HARWICH ZONING BYLAW SECTION 325-51(Q)(4).

David H. Dunlap Associates Inc.
ARCHITECTS * ENGINEERS * PLANNERS
105 WEBSTER STREET UNIT 2
HANOVER, MASSACHUSETTS 02339
PHONE: (781) 878-0066 FAX: (781) 878-7060
email: David@DHDunlap.com

Drawing is Dave Associates Inc. All Rights Reserved.
No use or reproduction of this material is permitted
without the express written consent of David H. Dunlap Associates, Inc.
Do not use drawing for construction unless signed & sealed.

HARWICH MA

SECOND FLOOR PLAN

Royal Apartments

| SCALE: 1/8" = 1'-0" | DR. BY: MCN |
|---|---|
| DATE: 10/19/20 | |

A-3

P:\DHDUNLAP-P-DRIVE\MULTI-FAMILY\ROYAL HARWICH\ROYAL-ARCHITECT\ROYAL-ARCH.DWG - PLOT DATE: 10/19/2020 - PLOT TIME: 1:26 PM

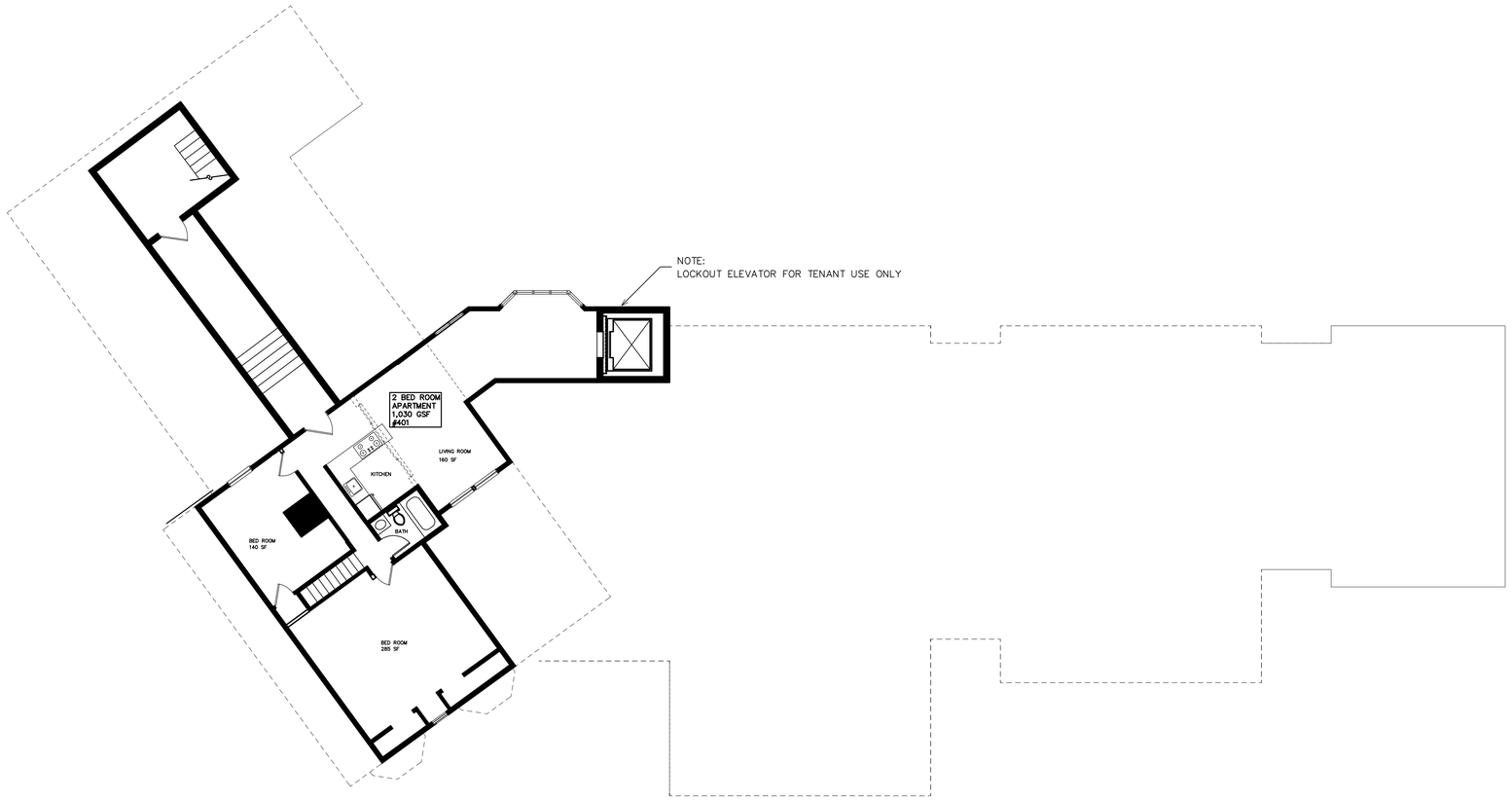


THIRD FLOOR PLAN
1/8"=1'-0"

NOTE: ALL HABITABLE ROOMS HAVE NO LESS THAN 120 SQUARE FEET FLOOR AREA AND NO MAJOR DIMENSION OF LESS THAN 10 FEET IN COMPLIANCE WITH THE HARWICH ZONING BYLAW SECTION 325-51(Q)(4).

David H. Dunlap Associates Inc.
ARCHITECTS * ENGINEERS * PLANNERS
105 WEBSTER STREET UNIT 2
HANOVER, MASSACHUSETTS 02339
PHONE: (781) 878-0066 FAX: (781) 878-7060
email: David@DHDunlap.com

David H. Dunlap Associates, Inc. All Rights Reserved.
This work product is the property of David H. Dunlap Associates, Inc. without his express written consent of David H. Dunlap Associates, Inc.
Do not scale drawing. Use dimensions only. Verify all dimensions on site.

HARWICH MA

# THIRD FLOOR PLAN

Royal Apartments

| SCALE: 1/8" = 1'-0" | DR. BY: MCN |
|---|---|
| DATE: 10/19/20 | |

A-4

PATH/NAME: C:\USERS\MATTHUCSK\DROPBOX\HDA PROJECTS\HARWICH\REC\HARWICH_ADU.ACC PLOT DATE: 10/19/2020 PLOT TIME: 10:23 AM

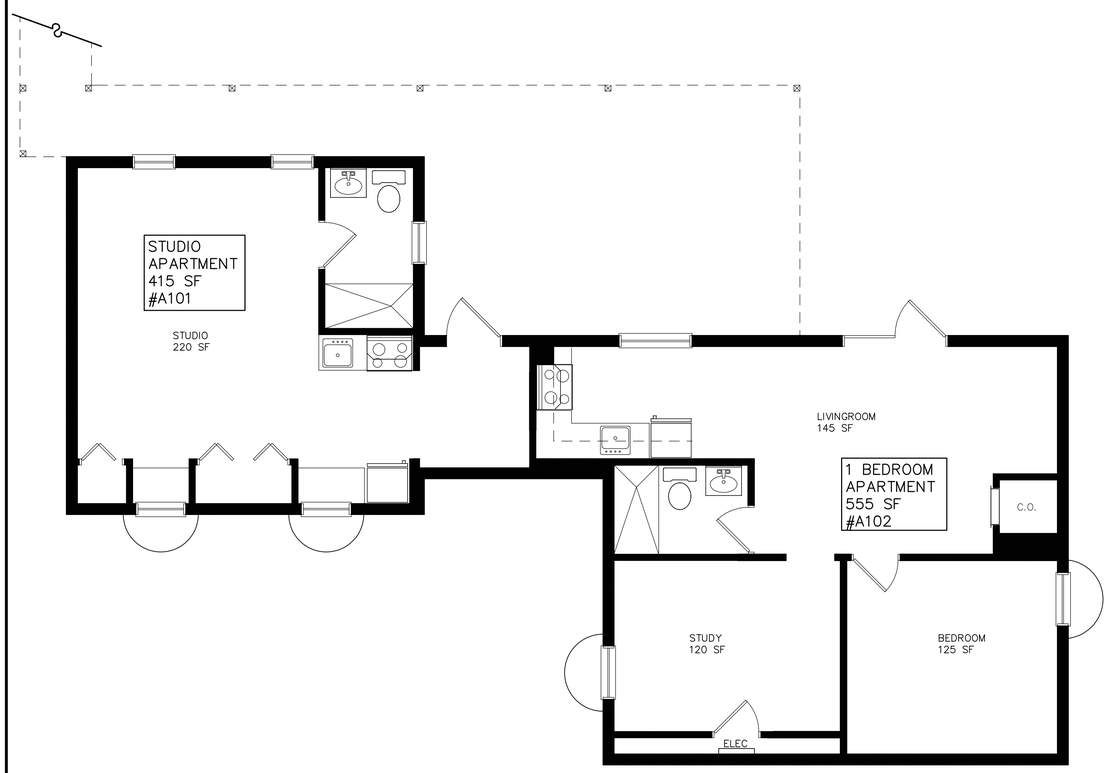


GROUND FLOOR PLAN

SCALE: 1/4" = 1'-0"

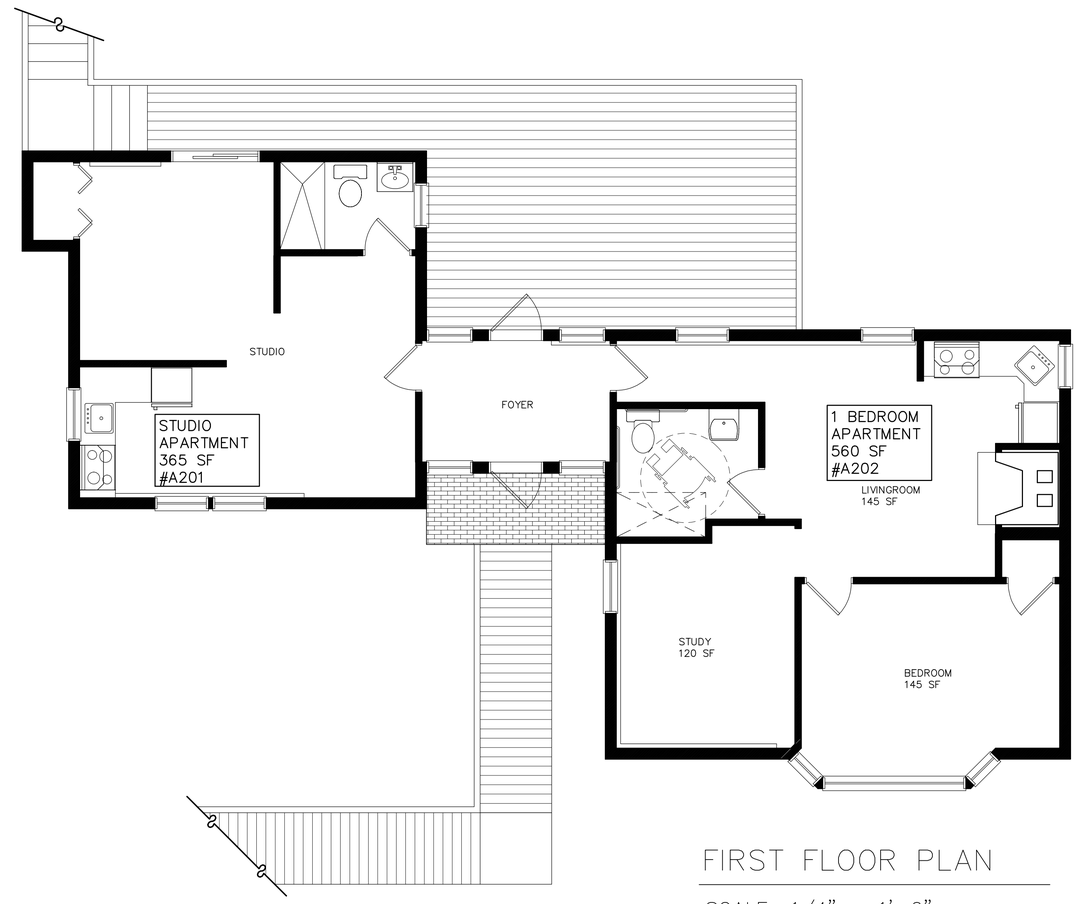


FIRST FLOOR PLAN

SCALE: 1/4" = 1'-0"

NOTE: ALL HABITABLE ROOMS HAVE NO LESS THAN 120 SQUARE FEET FLOOR AREA AND NO MAJOR DIMENSION OF LESS THAN 10 FEET IN COMPLIANCE WITH THE HARWICH ZONING BYLAW SECTION 325-51(Q)(4).

David H. Dunlap Associates Inc.
ARCHITECTS * ENGINEERS * PLANNERS
105 WEBSTER STREET UNIT 2
HANOVER, MASSACHUSETTS 02339
PHONE: (781) 878-0066 FAX: (781) 878-7060
email: David@DHDunlap.com

David H. Dunlap Associates, Inc. All Rights Reserved.
No use or reproduction of this drawing, in whole or in part, without the express written consent of David H. Dunlap Associates, Inc. is prohibited.
Do not scale drawing. Use dimensions where specified.

HARWICH, MA

ACCESSORY BUILDING
FLOOR PLAN

Royal Apartments

SCALE: 1/8" = 1'-0"
DATE: 10/19/20
DR. BY: MCN

A-5

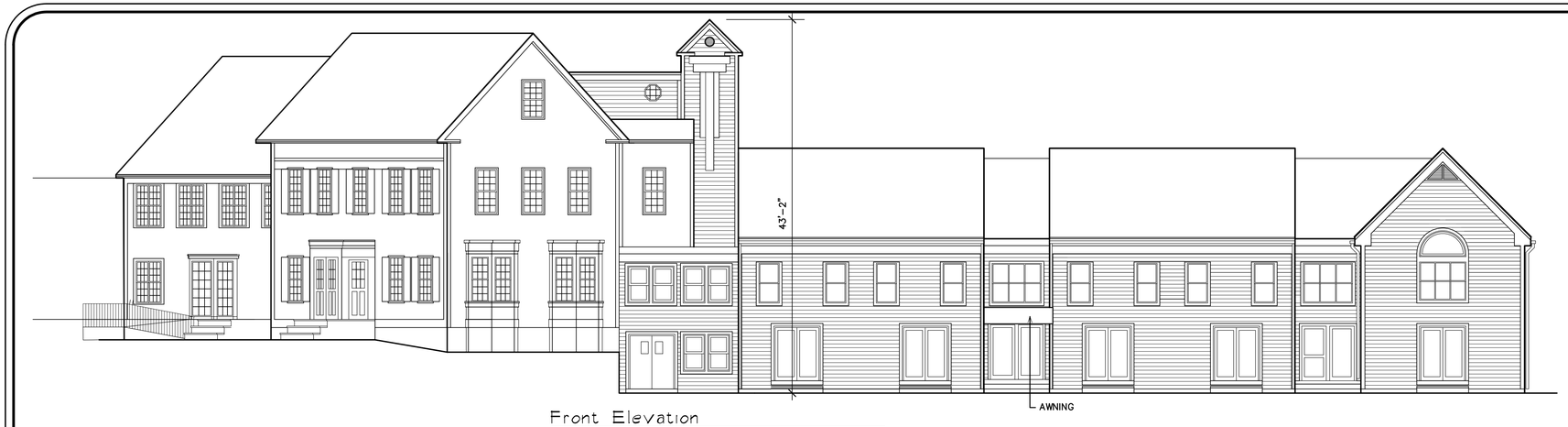


Front Elevation
1/8" = 1'-0"

NOTE:
EXTERIOR FINISH MATERIAL TO REMAIN UNLESS REPAIR IS REQUIRED AND WILL BE REPAIRED IN KIND.

EXISTING EXTERIOR FINISH CONSISTS OF A MIX OF CEDAR SHAKES AND CLAPBOARDS BOTH NATURAL AND PAINTED YELLOW.

Rear Elevation
1/8" = 1'-0"

Rear Elevation
1/8" = 1'-0"

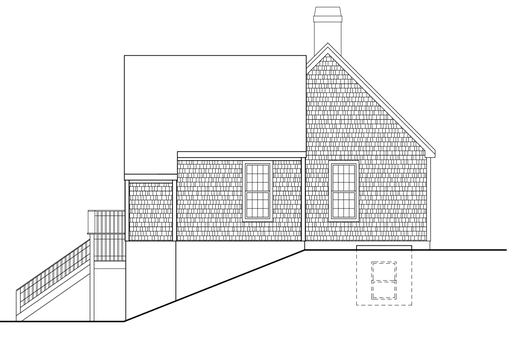

Side Elevation
1/8" = 1'-0"

Front Elevation
1/8" = 1'-0"

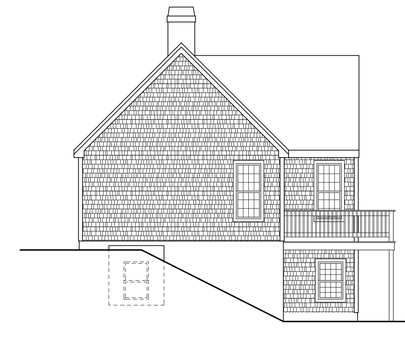

Side Elevation
1/8" = 1'-0"

REGISTERED ARCHITECT
DAVID H. DUNLAP JR.
No. 3829
HINGHAM
MASS.
COMMONWEALTH OF MASSACHUSETTS


David H. Dunlap Associates Inc.
ARCHITECTS * ENGINEERS * PLANNERS
105 WEBSTER STREET UNIT 2
HANOVER, MASSACHUSETTS 02339
PHONE: (781) 878-0066 FAX: (781) 878-7060
email: David@DHDunlap.com



David H. Dunlap Associates, Inc. All Rights Reserved.
Not to be used or reproduced without the express written consent of David H. Dunlap Associates, Inc.
Do not scale drawing. Use dimensions shown. Verify all dimensions on site.


# EXTERIOR ELEVATIONS

## Royal Apartments

HARWICH, MA

SCALE: 1/8" = 1'-0"
DATE: 10/13/20
DR. BY: MCN

A-6

PATH/NAME: G:\JOBS\MATLYNCH\CAD\HRB PROJECTS\HARWICH\ARCHITECTURAL ADD REV PLOT DATE: 10/19/2020 PLOT TIME: 11:57 AM

A Stormwater Report was also filed with this application, but not included in this on-line packet due to the size and length of the document.

Please contact the Harwich Planning Office, 508-42-7511 or ebanta@town.harwich.ma.us to request a copy of the PB2020-26 Royal Apartments Stormwater Report.

**Elaine Banta**

---

**From:** Tricia Murray <triciamurray1@gmail.com>
**Sent:** Wednesday, January 27, 2021 9:27 PM
**To:** Elaine Banta; Charleen Greenhalgh
**Cc:** gregoryywinston@gmail.com
**Subject:** Proposed development for 328 Bank St.

Dear Members of the Planning Board,

I write to express my concern about the proposed development for 328 Bank St. My understanding is that the proposal calls for 26 units with 26 kitchens. However, the parking lot only accommodates 14 cars. Assuming only one car per unit, which is an extremely conservative estimate, that means 12 units would be without parking. Not to mention there would be no parking for visitors, service providers, staff and vendors. Presumably the overflow parking will spill into the library parking lot, thereby depriving the library patrons of parking and impeding library business.

I am also concerned about the addition of traffic to the already busy Parallel St. Many vehicles, including public safety vehicles, use Parallel St. as a "cut through" to avoid the congestion on Main Street. The residents of the proposed units, as well as their visitors, building staff and service providers will cause even more traffic on the small, side street.

Lastly, there are no planned green spaces for the project. Even more troubling are the failure to meet the 50' lot line setback and the plan to asphalt right to the edge of the conservation land. Why are the developers allowed to bypass these requirements?

I respectfully request the Planning Board deny the proposed development as it is presently conceived. Thank you for your consideration.

Patricia Murray
826 Orleans Rd.
Harwich, MA 02645
triciamurray1@gmail.com
617.416.5601

Harwich Planning Board January 28, 2021
732 Main Street
Harwich Center. MA 02645

Dear Chairman Berry,

We are Ray and Jeanne Mongillo residents of 327 Bank Street Harwich. We are writing to express our concerns regarding the events of the recent Town Planning Board Meeting held via Zoom on January 13, 2021. Specifically, Case # PB2020-26 The Royal Apartments LLC.

We feel that our concerns regarding issuance of a Special Permits for Multifamily Use and the associated Site Plans failed to be fully addressed in that forum. To review, it was our understanding that the issues raised in our letter dated December 8, 2020, outlined several specific issues that would, in our opinion, result in a negative impact on the current neighborhood. Instead, we heard a long diatribe on the benefits of affordable housing. Please note, as stated in our previous letter, the need for affordable housing is moot and therefore we believe, should not be the primary focus of this hearing.

We believe the meeting objective requires reframing to clearly express what we believe to be the primary issue: "Is The Royal, located at 328 Bank Street, the appropriate venue for conversion to a multifamily dwelling including 23 apartments, housing a minimum of 43 residents." With a clearly defined objective, we can move forward with a fair process, that is not co-mingled with emotion, along with personal values, attitudes and beliefs.

We suggest the following outline and process to move forward:

1 Clearly defining the issue
2 What does the rule of law specifically reflect in relation the defined issue-
3 What is the analysis of the rule of law- Both attorneys in this case presented a compelling synopsis of their interpretation of the abovementioned rule of law. It is our understanding that an impartial third party must be retained to help untangle and settle this legal reasoning dispute.
4 Based on the above, and assigning weight to the many concerns voiced by the neighbors, arrive at a fair and equitable conclusion that serves both parties.

As an added note, we were pleasantly surprised to learn that during discussion of case PB2020-31 Main Street LLC, that there had been collegial conversations between Mr. Patel and his neighbors regarding his proposed generator installation. In contrast, as neighbors we have never been approached by or spoken to any person associated with The Royal. In addition, when the property was owned and managed by Gregg Winston, he kept us informally advised

of any changes, updates or plans he made to the property. We were supportive of his efforts as he had gained our trust and confidence. This type of proactive outreach, results in the difference between becoming good neighbors or adversaries.

We are willing to submit under a separate cover, an updated list of our concerns regarding the negative impact this project may have on our neighborhood. We offer this so they may be adequately addressed at the upcoming Planning Board Meeting scheduled for February 9, 2021. We appreciate your consideration and concern and request this letter be read at this meeting and entered into the public record.

Thank you.

Sincerely,

Jeanne M. Mongillo RN BSN MPH

Raymond J. Mongillo

## Charleen Greenhalgh

**From:** MARY DEBLOIS <mannixdeblois@comcast.net>
**Sent:** Sunday, January 31, 2021 8:28 PM
**To:** Charleen Greenhalgh; Elaine Banta
**Subject:** Harwich Planning Board, re: PB2020-26

RE: PB 2020-26 The Royal Apartments LLC, 328 Bank Street

Dear Harwich Planning Board:

I oppose this proposal as presented. But that being said, I would support this proposal if the number of bedrooms was 33% less: 20 bedrooms vs 30 bedrooms with no change in the 43 parking spaces.

There is no way to sugar-coat, traffic study or not. This proposal, as it stands, with 30 bedrooms, has the potential to house 60 drivers which could mean 60 cars -- and visiting friends with cars!

This proposal will have a huge impact on the multiple nearby intersections and the neighborhoods. This level of density on this small parcel of partially usable land is not appropriate for this site and it is not in keeping with the entire area.

Please, please listen to the neighbors' concerns as WE will be the most affected by this Board's decision. --- And please know that all those that I have spoken to are very happy to know that the Royal will be restored and used as multifamily housing, but voice the obvious that 30 bedrooms is too many for the location.

--- And 2 comments on relevant issues: 1) the affordable housing units. It was a nice gesture of the new owners to offer to set aside 3 units as affordable housing. In that regard, could the Board stipulate that the 3 units be 1 each: studio, 1 bedroom and 2 bedroom. This would guarantee that the 3 units would not be 3 studio units on the ground floor with a total square footage of less than 1000 sq ft. And 2) short term summer rentals. Could the Board stipulate that the owners prohibit tenants from using their units for short term summer rentals.

Thank you for your attention to my concerns. And I request that this email be made part of the public record. Additionally, since I cannot attend the Planning Board Meeting on February 9th, I request that my email be read aloud at the Meeting.

Respectfully,

Mary DeBlois
212 Bank Street
Harwich Port

**HARWICH PLANNING BOARD**
**HARWICH TOWN HALL - 732 MAIN STREET, HARWICH**
**VIA REMOTE PARTICIPATION GoToMeeting.com**
**TUESDAY JANUARY 12, 2021 – 6:30 PM**
**MEETING MINUTES**

**BOARD MEMBERS PRESENT:** Chairman, Duncan Berry; Vice-Chairman, Allan Peterson; David Harris; William Stoltz; Arthur Rouse; Mary Maslowski; and Craig Chadwick, were all present via remote participation.

**BOARD MEMBERS ABSENT:** Joe McParland.

**OTHERS PRESENT:** Charleen Greenhalgh, Interim Town Planner; Griffin Ryder, Town Engineer; Katie O'Neill; Noreen Kennedy; Peter Antonellis; Ben Zehnder; Alex Bardin; David Michniewicz; Jeanne Mongillo; Daniel Serber; Steven Clark; David Reid; Cyndi Williams; Gregory Winston; Dave Michniewicz; Brian Yergatian; Diane Rinkacs; Sheila Brennan; Daniel Ojala; Lawrence Brophy

**CALL TO ORDER** - 6:40 PM by Chairman Berry with a quorum present.

Pursuant to Governor Baker's March 12, 2020 Order Suspending Certain Provisions of the Open Meeting Law, G.L. c. 30A, §20, and the Governor's March 15, 2020 Order imposing strict limitations on the number of people that may gather in one place, this meeting of the Harwich Planning Board is being conducted via remote participation. No in-person attendance of members of the public will be permitted, but every effort will be made to ensure that the public can adequately access the proceedings as provided for in the Order. A reminder that persons who would like to listen or view this meeting while in progress may do so by logging in or calling in as specified above on this agenda.

**PB2020-27 NextGrid, 0 Depot Road, Site Plan Review Special Permit**
***Representatives:*** Daniel Serber & Brian Yergatian

Chairman Berry re-opened the Planning Board portion of the joint hearing at 6:42 PM by reading the legal notice into the record. Daniel Serber of NextGrid, Inc. seeks a Local Stormwater Permit Application filed pursuant to the Town of Harwich Comprehensive Stormwater and Illicit Discharge Regulations to construct a ground mounted Photovoltaic Array with an accompanying stormwater management system. The property is located at 0 Depot Road, Map 64, Parcel S-1 and a continuance of the public hearing for PB2020-27 NextGrid, Inc., as applicant, Brian G. Yergatian, P.E., as representative, and Steven Clark, as owner, seek approval of a Site Plan Review Special Permit pursuant to the Code of the Town of Harwich §325-55, in conjunction with §325, Article XXIII to establish a Large Scale Photovoltaic Array at property located at 0 Depot Road, Map 64, Parcel S-1 in the R-R zoning district. The property is only accessible via Mill Hill Road, Chatham. Hearing continued from 11/19/2020. The Planning Board Hearing was continued from 12/17/2020 to allow for this joint hearing with the Town Engineer.

Griffin Ryder, Town Engineer, began his portion of the hearing by explaining that the newspaper made a mistake publishing the notice, and his portion of the hearing will be continued to January 19th at 10 AM. He stated that he is acting as the Storm Water Authority and Permitting Agency. Abutters have been notified, and instructions for meeting login will be posted.

Daniel Serber and Brian Yergatian presented the application to the Planning Board. The sites topography makes this an ideal site for solar. The proposal presents a less impactful use than the existing one. Current on-site use and vehicle trips of are estimated at approximately 40 a day, or about 12,400 a year. The proposed use would result in only about 4 vehicle trips a year. There will not be an impact from nitrogen, traffic, schools, police, etc. This is a low impact development. He continued to present the proposed specifics of the solar field, including that 1.3 acres of trees will be cut, and there will be minimum site impact. Galvanized fencing will be installed, as well as remote monitoring. The site will be comprise primarily of native grasses and permeable material.

Mrs. Greenhalgh provided staff comments. Fire and Police: No issues. DPW: Lincoln Hooper email dated October 15, 2020 - Please be advised that the DPW does business with Mr. Clark and that he is currently doing brush grinding for the DPW under a contract signed a week ago. Additionally, Chris Nickerson is related to him, thus the comment on the application came from me. Although Chris and I both fee there is no nexus between his application to use his sandpit (I always thought it was in Chatham) for a solar array and the business we do with him. I felt that I should disclose these facts to you. Conservation: There is a wetland along the southern boundary. This wetland is also a certified vernal pool. How was the edge of this wetland determined, and is the wetland edge the landward limit of vernal pool? They are often not one-in-the-same. As proposed, no work would take place within the 100' wetland buffer, but we do not know how this was determined. The Conservation Administrator suggests they come to the Conservation Commission with a request for Determination of Applicability to nail down that wetland delineation. NOTE: The applicants represented has been in touch with the Conservation Administrator and has made the necessary filing with Conservation. Health: The Senior Health Agent reviewed the application for a variance to install a solar/photovoltaic facility at 0 Depot Road. This property is located in a Zone II, or water recharge area. The Health Department has no issues or concerns with the proposal, but it is important to note that Board of Health Regulations state that land use that results in impervious cover of more than 15% or 2,500 square feet of any lot, whichever is greater, is prohibited unless a system of artificial recharge of precipitation is provided that will not result in the degradation of groundwater quality. If the proposed use exceeds impervious cover of more than 15%, then the application will need to be reviewed by the Board of Health. Chatham Fire: No issues with the proposed project.

Planning Staff Comments 1. First the Town Engineer and the Town Planner want to make it clear that we are not opposed to the proposed project, quite the opposite. 2. The use was approved by the Zoning Board of Appeals, Case #2020-34. 3. Recommended conditions are as follows: a. Board of Health Regulations and Requirements shall be met. b. Approval is subject to the Local Stormwater Permit under the Comprehensive Stormwater and Illicit Discharge Regulation approved by the Town Engineer. c. The use of the Large Scale Ground Mounted Photovoltaic Array was approved by a use variance issued by the Zoning Board of Appeals pursuant to Case #2020-34. d. This decision shall be recorded at the Barnstable County Registry

of Deeds. e. Conformance with all review procedure requirements outlined pursuant to §400-18.G Inspection, certificate of completion and as-built plan, of the Code of the Town of Harwich shall be met.

Mr. Chadwick asked how the land will be maintained. Is there a plan for mowing?

Mr. Serber stated that there will be one annual mowing, and the remote monitors will alert if a shadow is being cast on the panels, and a crew member would be out to mow right away. No chemicals will be used on the site.

Mr. Rouse's call was dropped from the hearing at 6:57 PM.

Ms. Maslowski made the motion to close the public hearing at 6:58 PM, seconded by Mr. Chadwick, unanimously so voted via roll call.

On a motion from Ms. Maslowski seconded by Mr. Harris, the Board voted unanimously (6-0-0) to approve the following waivers as requested based on the facts presented by the applicant:

1. Waiver from provision of §400-16B, and in the alternative to allow the plan to follow requirements of Chapter 325, Article XXIII Large-Scale Ground-Mounted Photovoltaic Arrays, §325-140 Large-scale Solar Review.
2. Waiver from provision of §325-140B (2)(b) with respect to the boundary survey prepared by a Registered Land Surveyor as the Facility is located over 500 feet from the nearest property line to the west, per the Town GIS.
3. Waiver from §325-140B (3)(h) as §400-18 Review Procedure was followed.

On a motion from Ms. Maslowski seconded by Mr. Harris, the Board voted unanimously (6-0-0) to adopt the following:

1. The parcel is located within the RR zoning district and WR Overlay District.
2. The use was authorized through a variance from the Zoning Board of Appeals Case #2020-34.
3. The only access will be from Chatham over Mill Hill Road. No new roads are proposed.
4. The nearest home is over 800 feet away and would not be affected by the proposal.
5. The previous use of the property was that of a sand and earth removal pit.
6. The use will not cause harm or nuisance and will not derogate from the purpose and intent of the zoning codes of the Town of Harwich.

Mr. Rouse returned to the meeting at approximately 7:01pm.

On a motion from Ms. Maslowski seconded by Mr. Harris, the Board voted unanimously (7-0-0) to approve with conditions case number PB2020-27 NextGrid, Inc., for a Site Plan Review Special Permit pursuant to the Code of the Town of Harwich §325-55, in conjunction with §325, Article XXIII to establish a Large Scale Photovoltaic Array at property located at 0 Depot Road, Map 64, Parcel S-1 in the R-R zoning district. The decision is based on the aforementioned findings of fact, the fact that the application meets the necessary requirements and criteria for approval pursuant to the Code of Town of Harwich. The following conditions are imposed:

1. Board of Health Regulations and Requirements shall be met.

2. Approval is subject to the Comprehensive Stormwater and Illicit Discharge Regulation Permit approved and authorized by the Town Engineer.
3. The use of the Large Scale Ground Mounted Photovoltaic Array was approved by a use variance issued by the Zoning Board of Appeals pursuant to Case #2020-34.
4. This decision shall be recorded at the Barnstable County Registry of Deeds.
5. Conformance with all review procedure requirements outlined pursuant to §400-18.G Inspection, certificate of completion and as-built plan, of the Code of the Town of Harwich shall be met.

**PB2020-24 195 Queen Anne Road, LLC, 195 Queen Anne Road, Approval of a Site Plan Review Special Permit**

Chairman Berry reopened the hearing at 7:04 PM by reading the legal notice into the record. 195 Queen Anne Road, LLC, as applicant, George A. McLaughlin III, as manager, Daniel A. Ojala, P.E., P.L.S., as representative, seeks approval of a Site Plan Review Special Permit and a Special Permit for structures with a gross floor area > 7,500 SF and 20 or more new parking spaces pursuant to the Code of the Town of Harwich §325-55 and §§325 9 and - 51 to construct an industrial warehouse/contractor structure (7 bays, 9,000 sf). The property is located at 195 Queen Anne Road, Map 58, Parcel F1-2, in the I-L zoning district. Hearing Continued from 12/1/2020. Please note: the applicant has requested a continuance to March 9, 2021.

Ms. Maslowski made the motion to continue the hearing to March 9, 2021 no earlier than 6:30 PM, seconded by Mr. Chadwick, unanimously so voted via roll call (7-0-0).

**PB2020-28 Cape Cod Oil Company, H. Tasha, TR. of M.J.T. Enterprises, 6 Station Avenue, Site Plan Review Special Permit with Waivers**

Chairman Berry opened the hearing at 7:05 PM by reading the legal notice into the record. Cape Cod Oil Company, H. Tasha, TR. of M.J.T. Enterprises, as applicant, Jacobs Driscoll Engineering, Inc., as representative, seeks approval of a Site Plan Review Special Permit with waiver to establish and install two (2) 30,000 gallon propane tanks along with appurtenant equipment fixtures and site features pertinent to the establishment of a new Heating Fuel Resale and Storage use, which is an allowable use within the zoning district. The application is pursuant to the Code of the Town of Harwich §325-55. The property is located at 6 Station Avenue, Map 39, Parcel K3, in I-L zoning district. Hearing continued from 12/1/2020. Please note: the applicant has requested a continuance to February 23, 2021.

Ms. Maslowski made the motion to continue the hearing to February 13, 2021 no earlier than 6:30 PM, seconded by Mr. Chadwick, unanimously so voted via roll call.

**PB2020-31 711 Main Street LLC, 711 Main Street, Modify Site Plan Review Special Permit**
***Representative:*** Saumil Patel

Chairman Berry re-opened the hearing at 7:06 PM by reading the legal notice. 711 Main Street LLC, Saumil Patel, manager, seeks approval to modify Site Plan Review Special Permit PB2019-18 to reduce the number of existing parking spaces by one (1) to accommodate the

installation of an enclosed mechanical energy appliance (generator) at the rear of the building. The application is pursuant to the Code of the Town of Harwich §325-55. The property is located at 711 Main Street, Map 41, Parcel D8, in the C-V and Harwich Center Overlay zoning districts. Hearing continued from 12/17/2020

Saumil Patel presented the application. They are applying to add a generator to the rear of the building, which will take one of the existing parking spaces. They will still have 23 parking spaces, which meets all of the requirements. A stockade fence will surround the generator.

Mrs. Greenhalgh provided staff comments. Fire, Water, Health, Engineering & Highway: No issues or concerns. Planning Staff Comments 1. In discussion with the Town Engineer we both agree that this is an appropriate location for the generator. This was a difficult parking space to maneuver in the first place, so there are no concerns with generator to be located in this former parking space. 2. The initial site plan approval provide for two extra parking spaces. The elimination of one space should no impact the property or uses on the property. All conditions imposed pursuant to the PB2019-18 decision should continue and can be easily be made a condition of approval.

Two letters of concern regarding buffering and noise were received, which were both read into the record. The letters were from Peter Antonellis and Susan Sader and from Robert and Lynn Stern.

Mr. Harris asked how often the generator will run a test. Mr. Patel stated that it will run every two weeks for 15 minutes. They will schedule it to run during the day.

Ms. Maslowski asked if he was willing to put up a fence to create a screen. Mr. Patel stated that he ordered the tallest Leland Cypress trees available. They will grow about 4’ a year. That will screen the headlights, especially with a little more time to grow.

Ms. Maslowski asked when where the trees planted. It was responded about 4 weeks ago. They ordered all of the tallest one available. The shortest one is about 7’.

Mr. Harris questioned the spacing between trees. Mr. Patel responded about 5-6’.

Mr. Chadwick asked about planting on the retaining wall. Mr. Patel stated that the spacing is only about 18-20’, so it would be difficult, but not impossible.

Mr. Chadwick asked about putting a stockade fence on the retaining wall. Mr. Patel stated they were thinking of putting it on the property line for the most privacy.

Mr. Antonellis stated that they are amendable to a stockade fence on the property line that is likely the best solution. The pictures show that the trees are below the retaining wall. They would have to grow 4-5’ to be near the guard rail, and the trees wouldn’t help. The fence is the best solution for their concerns. He asked if there are requirements for power for the generator. How do you settle on a particular generator.

Chairman Berry stated that there is an equation of cubic volume of the area that uses a standard formula and thresholds for determining the size of a generator.

Mr. Antonellis asked how much noise does it put out vs. what is allowed under the Noise Pollution code.

Mr. Patel stated that the specifications have been shown to the building department, and they stated that it will not create too much noise. Testing is brief, and it will only be used during storms and power outages.

A lengthy discussion was held over fence height.

Ms. Maslowski made the motion to close the hearing at 7:33 PM, seconded by Mr. Chadwick, unanimously so voted via roll call.

On a motion from Ms. Maslowski seconded by Mr. Harris, the Board voted unanimously (7-0-0) by roll call vote to approve with conditions and waivers case number PB2020-31 711 Main Street LLC a modification of the PB20219-18 Site Plan Review Special Permit to reduce the number of existing parking spaces by one (1) to accommodate the installation of an enclosed mechanical energy appliance (generator) at the rear of the building for the property located at 711 Main Street, Map 41, Parcel D8. The application is pursuant to the Code of the Town of Harwich §325-55. The decision is based on the aforementioned findings of fact and the fact that the application meets the necessary requirements and criteria for approval pursuant to the Code of Town of Harwich. The following conditions are imposed:

1. All conditions and provisions of the PB2019-18 Site Plan Special Permit shall continue to be observed/enforced and shall continue to run with this decision.
2. This decision shall be recorded at the Barnstable County Registry of Deeds.
3. Conformance with all review procedure requirements outlined pursuant to §400-18.G Inspection, certificate of completion and as-built plan, of the Code of the Town of Harwich shall be met.
4. The applicant shall install a fence as close to and along the rear property line on 711 Main Street with its abutters and such fence shall be approved by the Harwich Historic District and Historical Commission.

**PB2020-26 Royal Apartments, 328 Bank Street, Special Permit for Multifamily Use and Site Plan Review**

***Representatives:*** Ben Zehnder & Alex Bardin

Chairman Berry re-opened the hearing at 7:37 PM. PB2020-26 The Royal Apartments LLC, as owner, Benjamin E. Zehnder, Esq, Representative, seeks approval of Special Permits for Multifamily Use and Site Plan Review for the proposed use and additional parking and other appurtenances pursuant to the Code of the Town of Harwich §§325-51.Q (approved at the 9-26-2020 Town Meeting) and 325-55. The property is located at 328 Bank Street, Map 41, Parcel N4 in the M-R-L zoning district. Hearing continued from December 17, 2020

Ben Zehnder reviewed the proposed application for 26 apartments, which is a much needed resource in the town.

Mrs. Greenhalgh provided staff comments. Health: The Senior Health Agent reviewed the application for approval of a multi-family use special permits in the Harwich center overlay district and a site plan review special permit at 328 Bank Street. The septic system was originally designed for 31 assisted living rooms, plus additional office space, for a total flow of 4773 gallons per day. The proposed floor plans show that 33 bedrooms are proposed, with a total flow of 3630. As the plan is proposed, the Health Department has no concerns, however; we do require that a passing Title 5 inspection be submitted prior to any building permit approval. Fire Chief: No issues for the Planning Board from Fire for this project. Police: The Deputy Chief had the traffic officer look at the plans. Here are Officer Holmes Comments, after meeting with Carla Burke, via email December 22, 2020: "I had a nice conversation with Carla and explained where our input comes from as far as looking at past crashes and traffic complaints. She was happy I listened to her voice and concerns. After talking with her I did recognize one problem. The height and/or location of the current fence along Bank St limits the sightline looking south. Could we have planning recommend the fence be removed and/or reduced in height to meet the provisions of the Bulk Height By-Law? No other concerns from me." DPW/Highway: No concerns. Conservation: As proposed all work is outside the 100' buffer zone. Erosion control shall be install on the 100' line to ensure work stays out of conservation jurisdiction. Permits required if work will enter conservation jurisdiction. So long as no new activity is happening in the 100' wetland buffer, conservation has no jurisdiction. Engineering: The Town Engineer reviewed the plans with the Town Planner; comments are noted below. Additionally, he will be reviewing in detail the Stormwater Report and provide comments as needed.

Planning Staff Comments 1. As noted, the Town Engineer and Town Planner met to review the plans and application as submitted on October 23, 2020. We had four items which have all been fully addressed with the most recent revised plans and other clarifications. 2. The Board has historically granted waivers from all setbacks within the Overlay district. The requested waivers are reasonable. 3. At this time, the plans and requirements of the zoning bylaws appear to have been met. 4. As of January 5, 2021 (9:15 am), 16 letters/emails, copies attached, had been received from abutters and a legal representative of abutters. (Please note that two (2) of the letters (from Mongillo and Menzies) are duplicates and only one of each is attached). 5. Reasonable conditions are recommended including: a. Erosion control shall be install and maintain during construction on the 100' conservation buffer line to ensure work stays out of conservation jurisdiction. Permits from Conservation shall be required if work enters conservation jurisdiction. b. A passing Title 5 inspection be submitted to the Health Department prior to any building permit approval. c. All signage shall comply with the Sign Code, Historic District & Historical Commission and Building Department Requirements. d. All lighting shall comply with the Lighting Code and Historic District & Historical Commission Requirements. e. Appropriate approvals from the Historic District & Historical Commission shall be required. f. Any changes to the approved site may require additional review and approvals from the Planning Board and the Historic District & Historical Commission. g. This decision shall be recorded at the Barnstable County Registry of Deeds. h. Conformance with all review procedure requirements outlined pursuant to §400-18.G Inspection, certificate of completion and as-built plan, of the Code of the Town of Harwich shall be met.

Ten letters of opposition were received. The letters concerns included density issues, hazards to vehicles and pedestrians, environmental, side walk and parking, on-site management, noise, and light.

Larry Brophy stated that he was a Town Planner, and on the Planning Board of ten years. He is also on the Harwich Affordable Trust. There is a dire need for this housing in Harwich. The need is critical, and anything we can do to help is good.

David Reid stated that part of his previous letter could be disregarded, as the new by-law had not yet been approved. Attachments are included in his letter. This is a non-conforming building.

Mr. Zehnder responded to Mr. Reid's comments.

Peter Antonellis raised concerns about pedestrian activity.

Judith Underwood spoke in support of housing in Harwich.

Mr. Stoltz recommended a traffic study, as well as sidewalks.

Diane Rinkacs stated that this is an emotional topic for affordable housing, but raised concerns with the proposal.

A very lengthy discussion ensued including the need for a traffic study and if so, what type. The Board ultimately did not chose to require a study.

Ms. Maslowski requested that the Planning Board seek legal advice from Planning Board council on the authority to act on the application, seconded by Mr. Stoltz. The motion passed with a vote of 6-1-0, with Vice-Chairman Peterson casting the dissenting vote.

Ms. Maslowski made the motion to continue the hearing to February 9, 2021 not earlier than 6:30 PM, seconded by Mr. Rouse, the motion passed with a vote of 6-1-0, with Vice-Chairman Peterson casting the dissenting vote.

A brief recess was taken from 9:49 PM to 10:00 PM.

**PB2020-32 Wychmere Harbor Real Estate LLC, 23 Snow Inn Road, Amend Site Plan Review Special Permit**

Chairman Berry opened the hearing by reading the legal notice into the record. Wychmere Harbor Real Estate LLC, applicant & owner, c/o Attorney Andrew Signer, representative, seeks to amend the Site Plan Review Special Permits granted in Cases PB2019-27 and PB2020-23, or in the alternative a new Special Permit to make additional alterations to the previously approved design of the Beach Club to re-design the pool area to include an additional pool, construct a new infant pool, create a fenced, natural lawn service alley along the east side, and make accompanying landscape and walkway revisions. The application is pursuant to the Code of the

Town of Harwich §325-55 (Site Plan Review), and Chapter 400. The property is located 23 Snow Inn Road, Map 8, Parcel P2-12, in the RH 3 and R L zoning districts.

At the request of the applicant's representative, Ms. Maslowski made the motion to continue the hearing to February 9, 2021 no earlier than 6:30 PM, seconded by Mr. Rouse, unanimously so voted via roll call (7-0-0).

**PB2020-35 Our & Blanchard, 103 & 105 Old Harwich Brewster Road, ANR**
***Representative:*** Dan Ojala

Our & Blanchard - Approval Not Required Plan (ANR) - 103 and 105 Old Harwich Brewster Road, Map 65, Parcels R2 and R3 respectively.

Dan Ojala, presented the ANR plan. He stated that this is a simple matter. It meets the shape, frontage, and acreage.

Mr. Stoltz questioned the access, which was clarified by Mr. Ojala.

Ms. Maslowski made the motion that said plan does not constitute a subdivision as the way shown on the plan is a public way maintained and used as a public way and has, in the opinion of the planning board, sufficient width, suitable grades and adequate construction to provide for the needs of vehicular traffic in relation to the proposed use of the land abutting thereon or served thereby, and for the installation of municipal services to serve such land and the buildings erected or to be erected thereon, seconded by Mr. Harris, unanimously so voted via roll call (6-0-0) (Mr. Rouse as an alternative is not eligible to vote on this matter).

**MEETING MINUTES**- December 12, 2020
Ms. Maslowski made the motion to approve the minutes as written, seconded by Mr. Chadwick, unanimously so voted via roll call (7-0-0).

**ZONING AMENDMENT**
Mrs. Greenhalgh provided a memo to the Board outlining potential the Zoning Amendment and changes to the Rules and Regulations. Including:

Zoning Amendments: 1. There will need to be changes made to the Flood Plain Requirements, Article XVII, §325-104 through 108.1. These do not need to be address at the 2021 Annual Town Meeting, but will be required soon after in order to keep the Town of Harwich Community Rating System status in good standing. 2. Perhaps a new section regarding erosion control. 3. §325-42.L – The MRL and MRL-1 parking setbacks to streets, side and rear lots lines is 50 feet.

Rules and Regulations: Back in 2008 the Town of Harwich codified the bylaws within the Town. For some reason the Planning Board's Rules and Regulations ("Rules and Regs"), formally known as Chapter 400 Subdivision of Land and Site Plan Special Permits, was included in the codification. It is not entirely clear as to the reason they were included. Other rules and/or regulations for other Boards/Committees/Commissions are not included in the "Codes". For example the Board of Health Regulations and the Harwich Wetland Regulations (Conservation

Commission). The Town Engineer and Planner have and will continue to work on an update to the Rules and Regulations. Appendix 1, the Rational Method of Drainage Design and other Tables and Figures in Appendices 2 and 3 all are in need updating. The checklist within Appendix 4 is also in need of corrections and updates. The Board may also wish to consider changing the abutter notification requirement.

**HISTORIC ADVISORY OPINIONS**- None

**WEST HARWICH DCPC**- Chairman Berry updated the Board on the DCPC process.

**REVIEW AND APPROVAL OF THE 2020 ANNUAL REPORT**
Mr. Harris made the motion to approve the annual report with a note that the 2020 Zoning Amendments were approved on January 12, 2020, seconded by Mr. Rouse, unanimously so voted via roll call (7-0-0).

**BRIEFINGS AND REPORTS BY BOARD MEMBERS**- None.

**ADJOURNMENT:**
Mr. Rouse made the motion to adjourn at 10:20 PM, seconded by Mr. Chadwick, unanimously so voted via roll call.

Respectfully Submitted,
Kathleen A. O'Neill

Adopted:

**HARWICH PLANNING BOARD**
**HARWICH TOWN HALL - 732 MAIN STREET, HARWICH**
**VIA REMOTE PARTICIPATION GoToMeeting.com**
**TUESDAY JANUARY 26, 2021 – 6:30 PM**
**MEETING MINUTES**

**BOARD MEMBERS PRESENT:** Chairman, Duncan Berry; Vice-Chairman, Allan Peterson; David Harris; William Stoltz; Arthur Rouse; Mary Maslowski; Joe McParland; and Craig Chadwick, were all present via remote participation.

**BOARD MEMBERS ABSENT:** None.

**OTHERS PRESENT:** Charleen Greenhalgh, Interim Town Planner; Katie O'Neill; Craig LeBlanc; Rob O'Neill; Robert Carter; Stuart Clark; Rosemary Panza; Justin Marks; Albert Sreter; Linda Reid; James Trainor; Roger Groskopf; and others.

**CALL TO ORDER** - 6:32 PM by Chairman Berry with a quorum present.

Pursuant to Governor Baker's March 12, 2020 Order Suspending Certain Provisions of the Open Meeting Law, G.L. c. 30A, §20, and the Governor's March 15, 2020 Order imposing strict limitations on the number of people that may gather in one place, this meeting of the Harwich Planning Board is being conducted via remote participation. No in-person attendance of members of the public will be permitted, but every effort will be made to ensure that the public can adequately access the proceedings as provided for in the Order. A reminder that persons who would like to listen or view this meeting while in progress may do so by logging in or calling in as specified above on this agenda.

Chairman Berry called for a roll call of the members to determine a quorum. All members present.

**PB2020-33 Main Street Stone Horse, 872 Route 28, New Use Special Permit**

Chairman Berry opened the hearing at 6:33 PM by reading the legal notice into the record. Main Street Stone Horse, applicant & owner, c/o William F. Riley, Esq. representative, seeks a new Use Special Permit, to convert one of the two dormitory buildings, specifically the building known as 868 Route 28, into twenty two (22) one-bedroom apartments and to amend the previously approved Site Plan Review Special Permit granted under case PB2019-13 with additional parking requirement and other waivers. The application, is pursuant to the Code of the Town of Harwich §325-51.Q (Multifamily Use) and §325-55 (Site Plan Review). The property is located 872 Route 28, Map 25, Parcel A2, is located in the CH-1 zoning district.

Chairman Berry stated that the applicant has requested a continuance to February 23, 2021.

Ms. Maslowski made the motion to continue the hearing to February 23, 2021, seconded by Mr. McParland, unanimously so voted via roll call vote (8-0-0).

**PB2020-34 Cool Change LLC, 282 Route 28, Site Plan Review & Use Special Permit**
***Representative:*** Rob O'Neill, Craig LeBlanc, Robert Carter, Justin Marks

Chairman Berry opened the hearing at 6:36 PM by reading the legal notice into the record. Cool Change LLC, Allen Harbor Marine, applicant & owner, c/o Rob O'Neill, representative, seeks a Site Plan Review and Use Special Permit pursuant to §§325-55; 325-13, Use Table, paragraph IV.19; and 325-51to construct a 4,102 square foot commercial building for a marine use (boat maintenance and repair) and associated parking at property located at 282 Route 28, Map 12, Parcel G2-1 in the CH-1 zoning district.

Craig LeBlanc began the hearing by explaining the proposal. The purpose of the new building is for service work during the fall and winter months due to winter conditions. The fall work will primarily be shrink wrapping. On nice days they are able to shrink wrap outside, and keep boats inside for inclement weather. In January they start prep work for the season, consisting of descaling, bottom painting, checking operation systems, etc. Each boat is inside for approximately 3-5 days, then it goes back outside. It is a continuous cycle. The building will handle generally 6 boats at once, depending on size. The extra inside space will allow to keep staff on year round through the winter. That work will continue through early to mid may, then the boats will head to the water and more work happens outside. The summer months will not be as busy. This will really help the work load during inclement weather.

Mrs. Greenhalgh provided staff comments. Health: A fully compliant septic system must be approved prior to any building permit issuance. Fire, Police, Water, DPW/Highway: No issues, comments or concerns. Conservation: Any work in the FEMA Flood Zone requires Conservation Commission approval, as this is Land Subject to Coastal Storm Flowage. Planning Staff Comments 1. The Town Engineer and Town Planner met to review the plans and application as submitted on January 5, 2021. At that time we sent an email to Rob O'Neill, Project Manager outlining our questions and comments. Revised plans and other information was provided on January 13, 2021. Most of our comments/questions had been addressed; however, we do provide the following additional comments: a. The westerly parking two (2) parking spaces nearest the proposed building cannot be used during the hours of operation of the Marine use, as these would block access to the three (3) parking spaces at the rear of the building. This could be accomplished with signage and can be made a condition of approval. b. We still encourage one central curb cut. Because this is a change of use this would need to go to MassDOT for a curb cut permit. This can be made a condition of approval. c. Dimensions for the parking spaces are not provided, including the HP space. If the application states what the various dimension would be, this too can be included in the conditions. d. Curbing is encouraged along the easterly parking area. We understand the desire to minimize curbing due to the boat and trailer access; however curbing along the easterly side should not impede access. This can be made a condition of approval. e. The applicant has request a waiver of the landscaping and planting. The Town Engineer and Interim Planner believe that those areas that will not be paved must be "green" and therefore some indication of loaming and seeding, and/or low growing shrubs should be provided.

2. The Zoning Board of Appeals approved variances for setbacks for the building and parking pursuant to Case #2020-41. 3. The property contains a use easement for parking for the

restaurant located to the west of the property (Villa Roma). The parking needs for each use will be offset by the nature of each business and the hours of operation. 4. The requested waivers would not be required provided there are conditions imposed including the submittal of a landscaping plan. 5. At this time, all other requirements of the zoning bylaws appear to have been met. 6. Reasonable conditions are recommended including: a. A fully compliant septic system must be approved prior to any building permit issuance. b. Any work in the FEMA Flood Zone requires Conservation Commission approval, as this is Land Subject to Coastal Storm Flowage. c. The two parking spaces on the westerly side of the lot shall be restricted to evening use only. Signage shall be installed to indicate said restriction. d. A Cape Cod Berm shall be installed along the easterly edge of the parking area, and shall be shown on the As-Built Plan. e. A Massachusetts Department of Transportation ("MassDOT") may be required as this is a change of use. Any changes to the entrance to the site as a result of this review shall not require further review from the Planning Board. A copy of the MassDOT curb cut permit shall be filed with the Planning Office. f. The regular parking spaces shall be 9' wide by 20' in length and the parking space for disabled persons shall be 8' wide with a 5' hatched aisle adjacent by 20' in length. g. All signage shall comply with the Sign Code and Building Department Requirements. h. All lighting shall comply with the Lighting Code. i. Prior to the issuance of a building permit, a landscape plan shall be submitted to the Planning Office. j. Any changes to the approved site may require additional review and approvals from the Planning Board. k. This decision shall be recorded at the Barnstable County Registry of Deeds. l. Conformance with all review procedure requirements outlined pursuant to the Code of the Town of Harwich §400-18.G Inspection, certificate of completion and as-built plan shall be met.

Mr. McParland asked for clarification on access to the Villa Roma property. It was clarified that there is an existing island between the two properties.

Rob O'Neill clarified that on the plan page C-0.6, its shown how traffic would flow between the new lot and Villa Roma. Traffic should not be impacted.

Mr. Harris asked who the southern accessible space serves. It was for the new building.

Mr. Harris asked how they will handle the accessibility need, as it blocks the garage. Mr. O'Neill stated that there will not be any marina customers, it will only be employees. Employees will only park in spaces that do not impact the bay.

Justin Marks stated that signage will be located in that area. Currently there is no disabled employee, but should one be hired they would coordinate boat deliveries around their schedule.

Mr. Chadwick confirmed that there is not outside storage of boats, and all the work will be inside. Craig Leblanc said that is correct.

Mr. Chadwick questioned the elevation of the building, which was clarified by Stuart Clark.

Mr. Chadwick questioned the West side driveway spacing by the dumpster. How is it anticipated the garbage truck will maneuver. Craig LeBlanc stated that the dumpster it will be movable, and the truck will pull in the driveway, and then pull out.

Mr. Harris questioned the access from Route 28 to the entrance to the new parking lot and maneuvering within the site. The parking spaces on the West side will have to be vacant when bringing boats in and out.

Mr. Leblanc stated the restaurant is only open for dinner service, so the schedule should work out fine.

A lengthy discussion ensued on parking and truck maneuvering.

Mr. Stoltz stated that some plans have the large door on the right side and other show it on the left, what is correct?

Mr. LeBlanc clarified that three doors of the same size are proposed. Mr. O'Neill stated that the option with the three doors has not been presented to the Board yet.

Mr. Stoltz questioned curb blocks on the east side of the parking lot. Mr. O'Neill stated that they are open to doing the wheel stops. They are under the impressive that if they do the wheel stops they will not meet the requirement of a Cape Cod berm. Mrs. Greenhalgh said they could do either, don't have to do both. Mr. O'Neill stated they will do the wheel stops.

Mr. McParland would like to move this to the next meeting when the proposal is cleaned up.

It was confirmed what details need to be added including landscaping, wheelstops, signage for the westerly spaces to be used only for the restaurant during evening hours and revised floor plans and rendering of the building if the proposal is for three larger overhead doors.

Ms. Maslowski clarified how many parking spaces are required to be there for Villa Roma and how many are needed for this new use? Mrs. Greenhalgh stated that 10 are needed for the marina use, and they have 18. This is a private arrangement with Villa Roma for parking.

Ms. Maslowski has concerns with the parking.

A lengthy discussion ensued.

Roger Groskopf, an owner of a condo behind the property, ask for clarification on the elevation change, which was answered by Mr. Stoltz.

Mr. McParland made the motion to continue the hearing to February 23, 2021, seconded by Mr. Stoltz. The motion and second were withdrawn following discussion.

Mr. McParland made the motion to continue the hearing to February 9, 2021, seconded by Mr. Stoltz, unanimously so voted via roll call.

The applicant understood that revised plans and other information must be filed by noon on Monday, Feb. 1, 2021.

**WEST HARWICH DCPC** - Continued discussion on Design Guidelines - Chairman Berry stated he will have a copy ready for next meeting.

**ZONING AMENDMENTS**- Discussion on possible zoning amendments/rules and regulations amendment for 2021

Mrs. Greenhalgh stated that she is looking for direction base on the December 29, 2020 memo that the Board has seen.

The Board agreed that work should be done regarding the setback requirements for parking within the MRL and MRL-1 zoning districts. This will be provided at the next meeting under new business.

A discussion ensued on whether to continue to requirement for certified mailings for abutter notifications. The Board was inclined to keep this in place.

**BRIEFINGS AND REPORTS BY BOARD MEMBERS**

Ms. Maslowski updated the Board on CPC. She expects they will start voting on the applications on Thursday. There were close to 16 applications, and they will be voting on 15 of them.

Mr. McParland updated the Board on the Capital Outlay plan, which was submitted several weeks ago.

**ADJOURNMENT:**
Mr. Harris made the motion to adjourn at 7:40 PM, seconded by Ms. Maslowski, unanimously so voted via roll call.

Respectfully Submitted,
Kathleen A. O'Neill

Adopted:

# AGENDA ITEM IV.A.2.A

Article ___: To see if the Town will vote to amend the Code of the Town of Harwich – Zoning Article XXIV West Harwich Special District by adding a new §325-160 as follows:

§325-160 Design Guidelines
For the purpose of this section the Harwich Planning Board shall adopt "*West Harwich Special District Site and Architectural Design Guidelines"* which shall constitute rules and regulations guiding historic structures and new construction within the WHSD.

***Explanation:*** *The new section 325-160 references design guidelines for the West Harwich Special District, which will be created and adopted by the Harwich Planning Board through a separate public hearing process. These guidelines will assist property owners and applicants with the development and redevelopment of properties within the West Harwich Special District (aka the West Harwich DCPC).*

# AGENDA ITEM IV.A.2.B

**Article ___:** To see if the Town will vote to amend the Code of the Town of Harwich – Zoning by amending §325-42.L by making the following changing (new text shown in **bold underline** and deleted language shown in ~~strike-out~~):

Parking and loading zone setbacks for all uses except single-family, two-family and single-family with accessory apartment shall be as follows. For commercial structures, wheel stops for parking spaces perpendicular to or at an angle to a structure shall be located so as to provide a clear area of three feet between the end of a vehicle parked in the space and the nearest structure.

| | **Parking Setbacks[1] (feet)** | | |
|---|---|---|---|
| **Zone** | **Street** | **Side Line** | **Rear** |
| RR, RM, RL, RH-1, RH-2 and RH-3 | 20 | 10 | 10 |
| CV, CH-1 and CH-2 | 20 | 10 | 10 |
| IL | 15 | 5 | 5 |
| MRL and MRL-1 | ~~50~~ **Note 2** | ~~50~~ **Note 2** | ~~50~~ **Note 2** |

**Notes:**

[1] No parking area containing more than four spaces or loading area shall be located within a required front yard, except that those buildings utilizing the provisions of §325-51L (Village Commercial Overlay District) shall not locate any parking within the front yard.

**[2](1) On already improved properties, the setbacks for parking shall be established at the time of the site plan review.**

**(2) For vacant lands to be developed for any purpose (other than single-family, two-family and single-family with accessory apartment) the minimum setbacks for parking shall be 20 feet from the street and 10 feet from the side and rear property lines.**

**Explanation:** *These changes would allow for creativity and flexibility for parking within the MRL and MRL-1 zoning district, particularly for already improved properties.*